CITY OF RANCHO CORDOVA

CITY COUNCIL

Monday, October 07, 2019

4:00 PM – Special Meeting
5:30 PM – Regular Meeting

AGENDA

Robert J. McGarvey, Mayor

David Sander, Vice Mayor

Garrett Gatewood, Council Member

Donald Terry, Council Member

Linda Budge, Council Member

CITY OF RANCHO CORDOVA

CITY COUNCIL MEETING

City Hall
2729 Prospect Park Drive, Rancho Cordova

Monday, October 07, 2019

4:00 PM – Special Meeting
American River Room North

5:30 PM – Regular Meeting
David B. Roberts Council Chambers

AGENDA

1. SPECIAL MEETING - CALL TO ORDER/ROLL CALL

Council Members Budge, Gatewood, Sander, Terry and Mayor McGarvey.

2. PUBLIC COMMENT

At a special meeting, citizens wishing to address the Council for any matter on the agenda may do so at the time the matter is discussed. Under the provisions of the California Government Code, the City Council is prohibited from discussing or taking action on any item not on the agenda.

3. SPECIAL MEETING ITEM

3.1 **Subject:** Discussion of the Visioning and Expansion of the Sacramento Children's Museum.
Recommendation: Receive presentation and provide input and direction to staff regarding the potential improvements and expansion of the Sacramento Children's Museum.
Result of Recommended Action: Based on input and direction from the City Council, staff will proceed with next steps for the Sacramento Children's Museum.
Staff Report: Micah Runner, Deputy City Manager and Stacy Delaney, Community Enhancement Analyst II.
Advances Goals: 1 and 6.

4. ADJOURNMENT OF SPECIAL MEETING

Mayor McGarvey will adjourn the special meeting to regular meeting in the David B. Roberts Council Chambers.

5. REGULAR MEETING - CALL TO ORDER / ROLL CALL

Council Members Budge, Gatewood, Sander, Terry and Mayor McGarvey.

6. METRO CABLE TV TELEVISION ANNOUNCEMENT

The Clerk will announce the meeting video recording and playback schedules.

7. PLEDGE OF ALLEGIANCE

The Mayor will call on someone in attendance to lead the Pledge.

8. INVOCATION

Julie Steinbach from the United Methodist Church of Rancho Cordova will give the invocation.

9. PUBLIC COMMENT

Citizens wishing to address the Council for any matter not on the agenda may do so at this time by completing and submitting a Speaker Card to the City Clerk. For items on the agenda, speakers will be called up to the podium by the Mayor at the point on the agenda when the item will be heard. Speakers are encouraged to keep comments to three minutes or less and to state name and community of residence.

Under the provisions of the California Government Code, the City Council is prohibited from discussing or taking immediate action on any item not on the agenda unless it can be demonstrated to be of an emergency nature or the need to take immediate action arose after the posting of the agenda.

10. COUNCIL REPORTS

11. CITY MANAGER'S REPORT

12. PRESENTATIONS

12.1 Community Enhancement Fund Grant Check Presentations to 1) Mandarins of Sacramento, Inc.; 2) Beyond the Village, Inc.; 3) Sacramento City Unified School District; 4) The Art of Yoga Project; 5) Sacramento Area Bicycle Advocates.

12.2 Proclamation Recognizing MDstaffers as the 49th Fastest Growing Company in the United States.

12.3 Cordova Accelerated Performing Arts (CAPA) Presentation – A Summer Theatre Program Providing Enhanced Educational Opportunities in the Arts for Students in Rancho Cordova.

12.4 Proclamation to A.M. Winn Public Waldorf eK-8 and George Washington Carver School of Arts and Science in Recognition of the 100th Anniversary of Waldorf Education Globally.

12.5 Introduce New Employee: Danielle Hale, Communications Officer by Maria Kniestedt, Communications and Public Affairs Director.

13. CONSENT CALENDAR ITEMS - ROLL CALL VOTE

13.1 **Subject:** Meeting Minutes from the Regular City Council Meeting of September 16, 2019, and the Special City Council Meeting of September 24, 2019.
Recommendation: Adopt the Minutes.

13.2 **Subject:** A Resolution Declaring the Results of the Mail Ballot Election Relating to the Imposition of the Annual Stormwater Utility Fee on the Stonecreek Industrial Center Project in the City of Rancho Cordova.
Recommendation: Adopt the Resolution.
Result of Recommended Action: Adoption of the Resolution will declare the results of the ballot tabulation in connection with the imposition of the Annual Stormwater Utility Fee on the Stonecreek Industrial Center Project. If majority approval exists, the City Council may impose the Annual Stormwater Utility Fee on the Stonecreek Industrial Center Project pursuant to the Fee Ordinance.
Staff Report: Elizabeth Sparkman, Community Development Director and Jeanette Cervantes, Management Technician.
Advances Goals: 5.

13.3 **Subject:** A Resolution Authorizing the City Manager to Execute Contract No. 58-2019 in an Amount Not to Exceed $1,285,710 with Coastline Water Resources for Storm Drain Maintenance Services through June 30, 2022.
Recommendation: Adopt the Resolution.
Result of Recommended Action: Adoption of the Resolution will authorize the City Manager to execute Contract No. 58-2019 with Coastline Water Resources in an amount not to exceed $1,285,710 for the provision of Storm Drain Maintenance Services through June 30, 2022.
Staff Report: Albert Stricker, Public Works Director and Dalia Fadl, Senior Civil Engineer.
Advances Goals: 1, 2 and 5.

13.4 **Subject:** A Resolution Authorizing the City Manager to Execute an Amendment to the Existing Contract for Tyler EnerGov Land Management and Permitting System; Total Contract with Amendment in an Amount Not to Exceed $1,857,630.
Recommendation: Adopt the Resolution.
Result of Recommended Action: Adoption of the Resolution will authorize the City Manager to amend our existing contract with Tyler Technologies EnerGov Land Management/Permitting System to include Tyler Cashiering, Tyler Content Manager, and allow for staff to roll out the new EnerGov system in two phases.
Staff Report: Kim Juran-Karageorgiou, Administrative Services Director and Rod Van Buskirk, Business Systems Analyst.
Advances Goals: 5.

14. CONSENT PUBLIC HEARING ITEMS - ROLL CALL VOTE

14.1 **Subject:** A Resolution Creating Special Tax Area Zone 25 and an Ordinance Establishing a Special Tax for Transit-Related Services for the Bradshaw Village Project.
Recommendation: Adopt the Resolution and introduce and waive the first reading of the Ordinance.
Result of Recommended Action: Adoption of the Resolution and Ordinance will assist the City in meeting the costs of providing Transit-Related Services by creating a Special Tax Area Zone and establishing a Special Tax for Transit-Related Services for the Bradshaw Village project.
Staff Report: Elizabeth Sparkman, Community Development Director and Jeanette Cervantes, Management Technician.
Advances Goals: 5.

14.2 **Subject:** A Resolution Declaring a Protest Hearing and Authorizing the Mailing of Property Owner Ballot Relating to the Imposition of an Annual Stormwater Utility Fee for the Bradshaw Village Project.
Recommendation: Adopt the Resolution.
Result of Recommended Action: Adoption of the Resolution will declare the results of the property owner protest and, if there exists less than a majority protest, authorize the mailing of a ballot to the property owner to approve the levy of the fee to pay for maintenance of storm drainage and flood protection systems for the project. The action also sets 1:30 p.m. on October 23, 2019 in the office of the City Clerk, as the time and date for the ballot tabulation for the matter.
Staff Report: Elizabeth Sparkman, Community Development Director and Jeanette Cervantes, Management Technician.
Advances Goals: 5.

15. PUBLIC HEARING ITEMS

15.1 **Subject:** Discussion of the First Amendment to the Elliott Development Agreement for Rio Del Oro Phase 1.
Recommendation: Receive information and provide direction to staff.
Result of Recommended Action: The item tonight will brief Council on the terms of a First Amendment to the Development Agreement relative to Rio Del Oro Phase 1, including requirements for the construction of improvements to White Rock Road and proposed adjustments to certain fees. At the next Council meeting in October, staff will return to introduce an Ordinance approving a First Amendment to the Development Agreement relative to the Phase 1 portion of Rio Del Oro.
Staff Report: Elizabeth Sparkman, Community Development Director.
Advances Goals: 2 and 5.

15.2 **Subject:** T-Mobile Antenna Addition Conditional Use Permit Amendment; Project No. DD9881 - Located at 10653 Coloma Road.
Recommendation: Determine the project is Categorically Exempt per Section 15303 (new construction or conversion of small structures) of the California Environmental Quality Act (CEQA) Guidelines; and adopt the Resolution.
Result of Recommended Action: Adoption of the Resolution would approve a Conditional Use Permit Amendment to increase the height of an existing telecommunications pole by 10 feet with a five foot antenna extension for an overall

height increase of 15 feet, installation of additional antennas, and an increase of the ground area by 310 square feet for corresponding ground equipment. Approval would allow the applicant to pursue necessary building permits for construction. The telecommunication facility will provide increased T-Mobile service.
Staff Report: June Cowles, Senior Planner.
Advances Goals: 5 and 6.

16. REGULAR CALENDAR ITEMS

16.1 **Subject:** Update on the Mills Station District (Formerly Known as the Civic Center) Development Project.
Recommendation: Receive general information about the proposals, selection process and expected timeline for determining the recommended Mills Station District Project Development Partner.
Result of Recommended Action: The project review team will move forward with the selection process and will return to City Council with the recommended Mills Station District Project Development Partner.
Staff Report: Micah Runner, Deputy City Manager and Laura Fickle, Economic Development Analyst.
Advances Goals: 1, 2 and 6.

17. COUNCIL REQUESTS FOR FUTURE AGENDA ITEMS

18. ADJOURNMENT

ADDITIONAL INFORMATION

SPECIAL MEETINGS LISTED BELOW ARE SUBJECT TO CHANGE/CANCELLATION WITHOUT FURTHER NOTICE.

UNLESS THE COUNCIL ADOPTS A MOTION TO EXTEND THE MEETING, ANY ITEM THAT IS NOT INITIATED BEFORE 11:00 PM WILL BE CONTINUED TO THE NEXT DAY AT 5:30 PM OR SCHEDULED ON THE NEXT REGULAR MEETING AGENDA OF THE COUNCIL.

Public documents related to items on the open session portion of this agenda, which are distributed to the City Council less than 72 hours prior to the meeting, shall be available for public inspection at the time the documents are distributed to the Council. Documents are available for inspection at the City Clerk's office located in Rancho Cordova City Hall.

The agenda items are accessible on the City's website at www.cityofranchocordova.org on Thursdays or Fridays prior to the Regular City Council Meeting.

CITYWIDE GOALS - (Adopted March 27, 2012)	
1.	Promote the Positive Image of Rancho Cordova
2.	Ensure a Safe, Inviting and Livable Community
3.	Empower Responsible Citizenship
4.	Establish Logical City Boundaries that Provide Regional Leadership and Address Financial Challenges
5.	Ensure the Availability of the Best Public Services in the Region while Practicing Sound Fiscal Management
6.	Drive Diverse Economic Opportunities

UPCOMING MEETINGS	
Tuesday, October 8	CANCELLED SPECIAL MEETING
Tuesday, October 15	5:30 PM Special Meeting/Closed Session
Monday, October 21	5:30 PM Regular Meeting
Tuesday, October 22	CANCELLED SPECIAL MEETING
Tuesday, October 29	5:30 PM Special Meeting/Work Session
Monday, November 4	4:00 PM Special Meeting/Regular Meeting
Tuesday, November 12	5:30 PM Special Meeting/Work Session
Monday, November 18	5:30 PM Regular Meeting
Tuesday, November 26	CANCELLED SPECIAL MEETING
Monday, December 2	4:00 PM Special Meeting/Regular Meeting
Tuesday, December 10	5:30 PM Special Meeting/Work Session
Monday, December 16	5:30 PM Regular Meeting

If you have any technical questions related to the agenda items, please contact the appropriate department as follows:

DEPARTMENTAL GENERAL TELEPHONE NUMBERS	
Building and Safety Division	(916) 851-8760
City Attorney's Office	(916) 556-1531
City Clerk's Department	(916) 851-8720
City Manager's Office	(916) 851-8800
Communications Department	(916) 851-8791
Economic Development Department	(916) 851-8780
Finance Department	(916) 851-8730
Housing Division	(916) 851-8757
Human Resources Department	(916) 851-8740
IT Department	(916) 851-8700
Neighborhood Services – Animal Services	(916) 851-8770
Parks & Recreation (Cordova Recreation & Park District)	(916) 362-1841
Planning Department	(916) 851-8750
Public Works Department	(916) 851-8710
Rancho Cordova Police Department	(916) 875-9600
Redevelopment Department	(916) 851-8780
Sac Metro Fire District	(916) 859-4300

The Rancho Cordova City Council meeting will be videotaped in its entirety and will be cablecast without interruption on Metro Cable 14, the Government Affairs Channel on the Comcast, Consolidated Communications and AT&T U-Verse Systems. Closed Captioning will be available on the playback cablecast. A DVD copy is available from the City Clerk's Department and a webcast of this meeting will be available for viewing via video streaming from the City's website within 48 hours of adjournment of this meeting.

In compliance with the Americans with Disabilities Act, if you need a disability-related modification or accommodation, including auxiliary aids or services, to participate in this meeting, please contact the City Clerk's Office at (916) 851-8720 at least 48 hours prior to the meeting.

CERTIFICATION OF POSTING OF AGENDA

I, Stacy Leitner, City Clerk for the City of Rancho Cordova, declare that the foregoing agenda for the Monday, October 07, 2019 Regular Meeting of the Rancho Cordova City Council was posted and available for review on October 3, 2019 at City Hall of the City of Rancho Cordova, 2729 Prospect Park Drive, Rancho Cordova, California, 95670. The agenda is also available on the city website at www.cityofranchocordova.org.

Signed October 3, 2019 at Rancho Cordova, California.

Stacy Leitner, City Clerk

MEMORANDUM

DATE: October 7, 2019

TO: Honorable Mayor and Council Members

FROM: Micah Runner, Deputy City Manager and Stacy Delaney, Community Enhancement Analyst II

SUBJECT: **DISCUSSION OF THE VISIONING AND EXPANSION OF THE SACRAMENTO CHILDREN'S MUSEUM**

RECOMMENDATION

Receive presentation and provide input and direction to staff regarding the potential improvements and expansion of the Sacramento Children's Museum.

RESULT OF RECOMMENDED ACTION

Based on input and direction from the City Council, staff will proceed with next steps for the Sacramento Children's Museum.

BACKGROUND

In fiscal year 2018/2019, the City Council approved a $200,000 grant award for physical improvements and enhancements to the operations of the existing museum space as well exploring the expansion of the Museum footprint into the adjacent suite and exterior area immediately surrounding both the Museum and adjacent space. The Sacramento Children's Museum has undertaken a visioning period to identify the potential improvements and enhancements to create a cohesive campus for visitors.

The visioning process considered an overview of educational trends, local landscape, space needs, as well as architectural elements and future exhibits. This discussion will help staff determine the desired timeline and next steps for the expansion of the Sacramento Children's Museum.

CITY COUNCIL MEETING

City Hall
2729 Prospect Park Drive, Rancho Cordova

Monday, September 16, 2019

5:30 PM – Regular Meeting
David B. Roberts Council Chambers

DRAFT MINUTES

1. REGULAR MEETING - CALL TO ORDER / ROLL CALL

Mayor McGarvey called the Regular Meeting to order in the David B. Roberts Council Chambers at 5:35 p.m.

Council Members Present: Budge, Gatewood, Sander, Mayor McGarvey.

Council Members Absent: Terry.

Staff Members Present: Abhar, Carr, Ducharme, Goulart, Harriman, Heisler, Kniestedt, Leitner, Lewis, Lindgren, Norton, Runner, Siren, Sparkman, Stricker, Thompson.

2. METRO CABLE TV TELEVISION ANNOUNCEMENT

The City Clerk read the meetings recording and playback schedule.

3. PLEDGE OF ALLEGIANCE

Walt Little led the pledge.

4. INVOCATION

Ginnie Kimball from The Church of Jesus Christ of Latter-day Saints gave the invocation.

5. PRESENTATIONS

5.1 Community Enhancement Fund Grant Check Presentations to 1) Elk Grove Unified School District 2) Children's Choice for Hearing & Talking (CCHAT) 3) Cordova Community Council Foundation 4) Cordova Community Food Locker.

5.2 Introduce New Employees: Kelly Thompson, Deputy City Clerk by Stacy Leitner City Clerk, and Arthur Klets, Code Enforcement Officer I by Russel Ducharme, Senior Code Enforcement Officer.

6. PUBLIC COMMENT

Mayor McGarvey opened the public comment period. The following individuals addressed the Council:

1. Sharon Judy
2. Helen Fredericks

Mayor McGarvey closed the public comment period.

7. COUNCIL REPORTS

Council reported on events since the last meeting.

8. CITY MANAGER'S REPORT

City Manager Cyrus Abhar gave his report.

9. CONSENT CALENDAR ITEMS - ROLL CALL VOTE

ACTION: Motion to approve items 9.1 through 9.7 by Budge second by Sander; Motion passed with a 4:0 vote. (Terry absent)

9.1 **Subject:** Meeting Minutes from the Special City Council Meeting of August 27, 2019, and the Regular City Council Meeting of September 3, 2019.
Recommendation: Adopt the Minutes.

9.2 **Subject:** A Resolution Authorizing the City Manager to Execute a Contract with Michael Baker International, Inc. in an Amount Not to Exceed $1,864,000 for a Term of October 1, 2019 to September 30, 2021 for On-Call Planning Services.
Recommendation: Adopt the Resolution.
Result of Recommended Action: Adoption of the Resolution will authorize the City Manager to execute a contract with Michael Baker International, Inc. in an amount not to exceed $1,864,000 for a term of October 1, 2019 to September 30, 2021 for On-Call Planning Services.
Staff Report: Darcy Goulart, Planning Manager.
Advances Goals: 5.

9.3 **Subject:** A Resolution Authorizing the City Manager to Execute Contract Amendment No. 24-2018-2 with Interwest Consulting Group to Increase the Contract Amount from $300,000 to a Not to Exceed Amount of $550,000 for Project Management and Technical Support for Design Projects, Development Services and Grant Opportunities.
Recommendation: Adopt the Resolution.
Result of Recommended Action: Adoption of the Resolution will authorize the City Manager to execute Contract Amendment No. 24-2018-2 with Interwest Consulting Group for project management and technical support for design projects, development services and grant opportunities. This will increase the contract amount from $300,000

to an amount not to exceed $550,000. The current contract term of June 30, 2020 remains unchanged.
Staff Report: Albert Stricker, Public Works Director and Rupa Somavarapu, Senior Engineer.
Advances Goals: 2, 3 and 5.

9.4 **Subject:** A Resolution Authorizing the City Manager to Execute Contract No. 153-2019 with R3 Consulting Group, Inc. in an Amount Not to Exceed $412,500 for On-Call Solid Waste Consulting Services.
Recommendation: Adopt the Resolution.
Result of Recommended Action: Adoption of the Resolution will authorize the City Manager to execute Contract No. 153-2019 with R3 Consulting Group, Inc. in an amount not to exceed $412,500 for on-call solid waste consulting services through June 30, 2022.
Staff Report: Albert Stricker, Public Works Director and Steve Harriman, Operations & Maintenance Division Manager.
Advances Goals: 1, 2 and 5.

9.5 **Subject:** A Resolution Declaring City's Intention to Impose an Annual Stormwater Utility Fee for the Maintenance of Storm Drainage and Flood Protection Systems for the Bradshaw Village Project.
Recommendation: Adopt the Resolution designating a time and place for hearing protests in connection with the annual Stormwater Utility Fee for the Bradshaw Village project.
Result of Recommended Action: Adoption of the Resolution will declare the Council's intention to impose the annual Stormwater Utility Fee for the maintenance of the storm drainage and flood protection system for the Bradshaw Village project and sets a public hearing for October 7, 2019 on the matter.
Staff Report: Elizabeth Sparkman, Community Development Director and Jeanette Cervantes, Management Technician.
Advances Goals: 5

9.6 **Subject:** A Resolution to Approve the Annexation Boundary Map for the Bradshaw Village Project and Annexation to the City of Rancho Cordova Community Facilities District No. 2008-1 (Street Lighting and Road Maintenance).
Recommendation: Adopt the Resolution.
Result of Recommended Action: Adoption of the Resolution approves Annexation Boundary Map No. 29 for the Bradshaw Village project and Annexation of the Property to Community Facilities District No. 2008-1 (Street Lighting and Road Maintenance, hereinafter "CFD No. 2008-1"). There is no financial impact to existing residents.
Staff Report: Elizabeth Sparkman, Community Development Director and Jeanette Cervantes, Management Technician.
Advances Goals: 5.

9.7 **Subject:** A Resolution Rejecting All Bids for the Rancho Cordova Neighborhood Services Center (RCNC) Roof Replacement Project.
Recommendation: Adopt the Resolution.
Result of Recommended Action: Adoption of the Resolution will reject all bids for the RCNC Roof Replacement Project.
Staff Report: Todd Humphrey, Facilities Manager.
Advances Goals: 5.

10. CONSENT PUBLIC HEARING ITEMS - ROLL CALL VOTE

10.1 **Subject:** A Resolution Approving the 2018-19 Community Development Block Grant (CDBG) Consolidated Annual Performance Evaluation Report (CAPER) for Submittal to the U.S. Department of Housing and Urban Development (HUD).
Recommendation: Adopt the Resolution.
Result of Recommended Action: Adoption of the Resolution will approve submittal of the 2018-19 CDBG CAPER for HUD review according to the requirements and timelines.
Staff Report: Stefan Heisler, Reinvestment Analyst.
Advances Goals: 1, 2, 5 and 6.

Mayor McGarvey opened the public hearing, seeing no speakers, Mayor McGarvey closed the public hearing.

ACTION: Motion to approve by Budge second by Gatewood; Motion Passed with a 4:0 vote. (Terry absent)

11. PUBLIC HEARING ITEMS

11.1 **Subject:** Public Hearing to Accept the Final Economic Subsidy Reports Prepared Pursuant to Government Code Section 53083 for Previously Approved Incentives for a Proposed New Hotel and Event Space at 11212 Point East Drive, Rancho Cordova, CA and a Business Expansion at 11151 Trade Center Drive, Suite 106, Rancho Cordova, CA.
Recommendation: Conduct public hearing on two required economic subsidy reports for previously approved incentives and accept reports.
Result of Recommended Action: The City will fulfill its statutory reporting requirements for the two previously approved economic subsidies.
Staff Report: Amanda Norton, Economic Development Manager.
Advances Goals: 6.

Mayor McGarvey opened the public hearing, the following individual addressed the Council:

1. Mary Nesel

Seeing no additional speakers, Mayor McGarvey closed the public hearing.

ACTION: Motion to approve by Budge second by Sander; Motion passed with a 4:0 cote. (Terry absent)

12. REGULAR CALENDAR ITEMS

None.

13. COUNCIL REQUESTS FOR FUTURE AGENDA ITEMS

None

14. ADJOURNMENT

Mayor McGarvey adjourned the meeting in memory of Ed Evans at 6:22 p.m.

_____
Stacy Leitner, CMC
City Clerk

CITY COUNCIL MEETING

City Hall
2729 Prospect Park Drive, Rancho Cordova

Tuesday, September 24, 2019

5:30 PM – Special Meeting
American River Community Room North

DRAFT MINUTES

1. SPECIAL MEETING - CALL TO ORDER/ROLL CALL

Mayor McGarvey called the special meeting to order in the American River Community Room at 5:35 p.m.

Council Members Present: Budge, Gatewood, Sander (arrived at 5:42pm), Terry, Mayor McGarvey.

Council Members Absent: None.

Staff Members Present: Abhar, Carr, Harriman, Kniestedt, Leitner, Leonardich, Lindgren, Norton, Pittman, Roach, Runner, Siren, Sparkman, Stricker, Thompson.

2. PUBLIC COMMENT

Mayor McGarvey opened up the public comment period, seeing no speakers, Mayor McGarvey closed the public comment period.

3. SPECIAL MEETING ITEM

Item Number 3.2, Regarding Recent Market Developments and Legislation Impacting the City's Solid Waste and Recycling Programs, was heard before Item 3.1, regarding Discussion of Policies and Procedures for Naming Community Assets and Public Facilities.

ACTION: Public comments and input were received regarding the Presentation on Recent Market Developments and Legislation Impacting the City's Solid Waste and Recycling Programs.

3.2 **Subject:** Presentation on Recent Market Developments and Legislation Impacting the City's Solid Waste and Recycling Programs.
Recommendation: Receive staff presentation and provide direction, as appropriate.

Result of Recommended Action: Based on the Council direction, staff may proceed with adopting a formal city position on the pending bills addressing restrictions on single-use plastics.
Staff Report: Steve Harriman, Operations and Maintenance Division Manager.
Advances Goals: 1 and 3.

ACTION: Public comments and input were received regarding the Discussion of Policies and Procedures for Naming Community Assets and Public Facilities. Council Members Sander and Budge were appointed to a subcommittee on street naming. Discussion took place regarding the naming of specific facilities which will return to Council at a later date.

3.1 **Subject:** Discussion of Policies and Procedures for Naming Community Assets and Public Facilities.
Recommendation: Receive presentation and provide input and direction to staff regarding the naming of public facilities within the City of Rancho Cordova.
Result of Recommended Action: Based on input and direction from the City Council, staff will proceed with developing a formal policy for Council consideration and approval.
Staff Report: Micah Runner, Deputy City Manager.
Advances Goals: **1.**

4. ADJOURNMENT

Mayor McGarvey adjourned the meeting at 7:43 p.m.

_____
Stacy Leitner, CMC
City Clerk

MEMORANDUM

DATE: October 7, 2019

TO: Honorable Mayor and Council Members

FROM: Elizabeth Sparkman, Community Development Director and Jeanette Cervantes, Management Technician

SUBJECT: **A RESOLUTION DECLARING A PROTEST HEARING AND AUTHORIZING THE MAILING OF PROPERTY OWNER BALLOT RELATING TO THE IMPOSITION OF AN ANNUAL STORMWATER UTILITY FEE FOR THE BRADSHAW VILLAGE PROJECT**

RECOMMENDATION

Adopt the Resolution.

RESULT OF RECOMMENDED ACTION

Adoption of the Resolution will declare the results of the property owner protest and, if there exists less than a majority protest, authorize the mailing of a ballot to the property owner to approve the levy of the fee to pay for maintenance of storm drainage and flood protection systems for the project. The action also sets 1:30 p.m. on October 23, 2019 in the office of the City Clerk, as the time and date for the ballot tabulation for the matter.

BACKGROUND

The Bradshaw Village project has a condition of approval which requires funding for operation and maintenance of the storm drainage system. This condition will be satisfied by the participation in the new Stormwater Utility Fee for storm drainage and flood protection services which is the subject of tonight's action.

The property owner of the Bradshaw Village project has requested the City annex the project to the City's Stormwater Utility Fee pursuant to the California Health and Safety Code Section 5471 et seq. to provide the method of financing for storm drainage and flood protection services required to meet the condition.

On September 16, 2019, Council adopted a Resolution which established Procedures for the Conduct of a Protest Hearing and Balloting Relating to a Stormwater Utility Fee (the "Procedures") and designated October 7, 2019 at 5:30 p.m. as the time and place for hearing protests in connection with the annual Stormwater Utility Fee for the Bradshaw Village project.

DISCUSSION

The property owner has submitted a petition and waiver for the City to institute the proceedings to participate in the Stormwater Utility Fee. This annexation to the Stormwater Utility Fee will include the project generally known as the Bradshaw Village project, see Attachment 2. The maintenance services to be funded include the furnishing of services and materials for the ordinary and usual operation, maintenance, and servicing of the storm drain and flood protection systems.

Attachment 1 is the Resolution declaring the results of the property owner protest and authorizing the mailing of the property owner ballot, as required by Article XIII D of the California Constitution (also known as Proposition 218). The resolution sets forth the tabulation of ballots on October 23, 2019 at 1:30 p.m. in the office of the City Clerk. The results of the mailed ballot election will be presented to City Council at their regularly scheduled meeting November 4, 2019 and additional actions will be recommended based the ballot results.

A "Rate Analysis Report" was approved by City Council on September 4, 2014 by Resolution 103-2014 setting Fiscal Year 2014/2015 maximum annual Stormwater Utility Fee amount for each parcel proportionate to the estimated stormwater runoff for each parcel, see Attachment 3. The maximum annual fee will increase each subsequent Fiscal Year by the annual change in the Consumer Price Index (CPI), during the preceding year, for All Urban Consumers, for the San Francisco-Oakland-San Jose areas, published by the United States Department of Labor, Bureau of Labor Statistics.

A sample of the Stormwater Utility Fees for Fiscal Year 2019-2020 are summarized in the following table:

Table 1

Land Use Description	Total Area (acres)	Sample Fee
Single Family Residential (SFR1)	0.16	$131.64
Single Family Residential (SFR2)	0.22	$144.80
Single Family Residential (SFR3)	0.30	$154.69
Single Family Residential (SFR4)	0.40	$164.54
Single Family Residential (SFR5)	1.00	$164.54
Multi-Family Residential (MFR1)	5.00	$1,151.95
Commercial	1.00	$1,234.24
Industrial	1.00	$1,316.54
Schools	5.00	$822.83
Private Recreation	1.00	$411.40
Parks/Greenbelts	2.00	$164.54
Public Property (with structures)	2.00	$493.68

ATTACHMENTS

1. Resolution
2. Boundary Map
3. Rate Analysis Report

ATTACHMENT 1

CITY OF RANCHO CORDOVA

RESOLUTION NO. XX-2019

A RESOLUTION OF THE CITY COUNCIL OF THE CITY OF RANCHO CORDOVA, STATE OF CALIFORNIA, DECLARING THE RESULTS OF A MAIL BALLOT ELECTION RELATING TO THE IMPOSITION OF THE ANNUAL STORMWATER UTILITY FEE ON THE STONECREEK INDUSTRIAL CENTER PROJECT IN THE CITY OF RANCHO CORDOVA

WHEREAS, On August 5, 2019, the City Council adopted a Resolution declaring its intention to impose the Annual Stormwater Utility Fee ("Fee") for the Stonecreek Industrial Center Project; and

WHEREAS, Article XIII D of the California Constitution (Proposition 218) requires the City to follow certain procedural and substantive requirements relating to the imposition of property-related fees and charges (as defined in Proposition 218); and

WHEREAS, the City has determined that the Fee is a property related fee, subject to the provisions of Proposition 218; and

WHEREAS, before imposing the Fee, the City Council is required to hold a noticed public hearing on a written report (the "Written Report") containing a description of each parcel of real property within the City to which the Fee is applicable and the amount of the Fee for each such parcel for Fiscal Year 2020-2021 and to consider protests to the Fee and, if a majority protest is not received at the public hearing, the Council must submit the question of the imposition of the Fee to a vote of the owners of the property subject to the proposed Fee for approval before the proposed Fee may be levied; and

WHEREAS, in accordance with Proposition 218 the City Council held a duly noticed public hearing on the matter of the Written Report and the proposed Fee on September 3, 2019 and took testimony, both written and oral; and

WHEREAS, having determined a written protest was not received from property owner representing a majority of the parcels subject to the Fee, the City Council adopted a Resolution authorizing the mailing of a property owner ballot (the "Ballot Measure") for the purpose of submitting the Fee to a vote of the owner of parcel subject to the Fee, and subject to approval by a majority vote of the owner of parcel subject to the Fee; and

WHEREAS, pursuant to the terms of Ordinance No. 7-2014 and the unanimous consent of the property owner, the Property Owner Balloting was conducted and completed and the City Clerk has on file a Certificate of the City Clerk as to the Results of the Canvass of the Ballot Return in Connection with the Proposed Stormwater Utility Fee (the "Certificate"), a copy of which is attached hereto as Exhibit B and by this reference incorporated herein.

NOW, THEREFORE, BE IT IS HEREBY RESOLVED THE CITY COUNCIL OF THE CITY OF RANCHO CORDOVA:

1. The above recitals are true and correct.
2. The Certificate is hereby accepted into the records of the City.

ATTACHMENT 1

3. The Ballot Measure is authorized as set forth in Exhibit A attached hereto and by this reference incorporated herein.
4. The results of the Ballot Measure are as set forth in the Certificate on file with the City Clerk and attached to this Resolution as Exhibit B ("Certificate").
5. The City Clerk is authorized to declare the results of the mail ballot election relating to the imposition of the Stormwater Utility fee on the Stonecreek Industrial Center Project.
6. Pursuant to said Certificate, the Ballot Measure submitted was approved by a majority vote of the owner of parcel subject to the Fee, the Fee is hereby imposed pursuant to Ordinance No. 7-2014 on the Stonecreek Industrial Center Project.

PASSED AND ADOPTED by the City Council of the City of Rancho Cordova this 7th day of October, 2019 by the following vote:

AYES:

NOES:

ABSENT:

ABSTAIN:

_____
Robert J. McGarvey, Mayor

ATTEST:

_____
Stacy Leitner, CMC
City Clerk

Rancho Cordova Stormwater Utility Fee – Official Property Owner Ballot

The person completing and submitting this Property Owner Ballot must be the owner of the property identified above or the representative of the owner of such property who is legally authorized to complete and submit this ballot for and on behalf of the owner. The enclosed "Summary of Property Owner Ballot Procedures" has been provided to assist you in filling out the ballot. If there are two or more property owners, only one needs to sign and return the ballot. One ballot will be counted per property.

Assessor's Parcel Numbers: 072-2860-002

Property Address: Southeast corner of Zinfandel Drive and Baroque Drive

Designation: Vacant Land

Total Parcel(s) Area (acres): 40.65

DMUs: 0

Proposed Max. FY 2019-2020 Annual Fee Amount: $131.64 /

Assessor's Parcel Numbers: 072-2860-002

Owner Name: 68 Zinfandel, JV, LLC

Proposed Maximum FY 2019-2020 Annual Fee Amount: $131.64 per DMU

In order to provide the City of Rancho Cordova with a dedicated funding source to repair, reconstruct and maintain the storm drain system and to protect water quality, shall the City impose an annual Stormwater Utility Fee as shown in the Rate Analysis Report, dated 8/7/2014?

☑ **YES** I support the proposed annual Stormwater Utility Fee

☐ **NO** I oppose the proposed annual Stormwater Utility Fee

Vote Here

I hereby declare, under penalty of perjury under the laws of the State of California, that I am the owner, or the authorized representative of the owner, of the parcel identified above. Your ballot will not be counted if you do not sign below.

9/10/19	SARA LebAstch	
Date	Printed Name	Signature

If approved by a majority of the returned ballots, the proposed maximum annual Storm Drain User Fee rate for FY 2019-2020 will be $131.64 per Drainage Measurement Unit (DMU). The maximum rate per DMU will increase annually by the amount of the increase of the CPI. However, each year the City Council will hold a public hearing and determine the actual rate per DMU that will be charged. At the annual public hearing, the City Council will set the actual rate for the next year, which would be equal to or less than the annual maximum rate. The Council may decide to reduce the rate or set the rate to $0 per DMU in any fiscal year.

Please mark your ballot in ink and return the entire page.

Upon completion, fold the ballot, place it in the addressed, return envelope and seal the envelope. Pursuant to the enclosed instructions, mail the ballot to the address shown on the return envelope, or deliver to the City Clerk at City Hall located at 1:30 Wednesday, September 18, 2019.

Please see the "Summary of Property Owner Ballot Procedures" on the enclosed sheet.

68 Zinfandel, JV, LLC
1725 Capital Ave
Sacramento, CA 95811

return to:

City of Rancho Cordova
City Clerk
2729 Prospect Park Drive
Rancho Cordova, CA 95670

Exhibit B

CERTIFICATE OF THE CITY CLERK AS TO

THE RESULTS OF THE CANVASS OF THE ELECTION RETURNS

IN CONNECTION WITH THE PROPOSED STORMWATER UTILITY FEE

IN THE CITY OF RANCHO CORDOVA

I, Stacy Leitner, City Clerk of the City of Rancho Cordova, hereby certify that I canvassed the returns of the election in connection with the imposition of an annual stormwater utility fee that the day for the return of mailed ballot, scheduled for September 18, 2019. The election was concluded on that date and that the total number of ballots cast in said election and the total number of votes cast for and against the ballot measure, as specified below, are full, true and correct.

Total of Ballots Received: 1

Total "Yes" Ballots: 1

Total "No" Ballots: 0

Stacy Leitner

Stacy Leitner, CMC, City Clerk

MEMORANDUM

DATE: October 7, 2019

TO: Honorable Mayor and Council Members

FROM: Albert Stricker, Public Works Director and Dalia Fadl, Senior Civil Engineer

SUBJECT: **A RESOLUTION AUTHORIZING THE CITY MANAGER TO EXECUTE CONTRACT NO. 58-2019 IN AN AMOUNT NOT TO EXCEED $1,285,710 WITH COASTLINE WATER RESOURCES FOR STORM DRAIN MAINTENANCE SERVICES THROUGH JUNE 30, 2022**

RECOMMENDATION

Adopt the Resolution.

RESULT OF RECOMMENDED ACTION

Adoption of the Resolution will authorize the City Manager to execute Contract No. 58-2019 with Coastline Water Resources in an amount not to exceed $1,285,710 for the provision of Storm Drain Maintenance Services through June 30, 2022.

BACKGROUND

The work conducted under this contract includes cleaning, inspecting, and emergency repair of structures within the City's storm drain system including pipes, inlets, manholes, culverts, outfalls, pump station wet wells, and other stormwater facilities as needed. This will be a three-year contract beginning October 7, 2019 and expiring on June 30, 2022. The contract allows for an optional two-year extension.

Proposals were solicited on the City's Website and CIPList.com on August 15, 2019. A mandatory pre-proposal meeting was held on August 26, 2019. Two proposals were received on September 5, 2019. The submitted proposals were reviewed and determined to be complete and competitive. Of the two proposals, the evaluation committee determined Coastline Water Resources to be the most qualified and recommends contract award to Coastline Water Resources.

FISCAL IMPACT

Funding for the contract will be from the City's Stormwater Utility Fee. There is no impact to the general fund.

ATTACHMENTS

1. Resolution
2. Bid Proposal

ATTACHMENT 1

CITY OF RANCHO CORDOVA

RESOLUTION NO. XX-2019

A RESOLUTION OF THE CITY COUNCIL OF THE CITY OF RANCHO CORDOVA, STATE OF CALIFORNIA, AUTHORIZING THE CITY MANAGER TO EXECUTE CONTRACT NO. 58-2019 IN AN AMOUNT NOT TO EXCEED $1,285,710 WITH COASTLINE WATER RESOURCES FOR STORM DRAIN MAINTENANCE SERVICES THROUGH JUNE 30, 2022

WHEREAS, the City solicited proposals for Storm Drain Maintenance Services under the requirements of state law and accepted proposals on September 5, 2019; and

WHEREAS, the City received two proposals and Coastline Water Resources was found to be the most qualified contractor; and

WHEREAS, adoption of this Resolution will authorize the City Manager to execute a three-year contract through June 30, 2022 with Coastline Water Resources in an amount not to exceed $1,285,710; and

WHEREAS, the work scope includes cleaning, inspecting, and emergency repair of structures within the City's storm drain system including pipes, inlets, manholes, culverts, outfalls, pump station wet wells, and all other stormwater facilities as needed; and

WHEREAS, the contract will be funded through the City's Stormwater Utility Fee; and

WHEREAS, the amount exceeds the maximum the City Manager has authorization to approve.

NOW, THEREFORE, BE IT HEREBY RESOLVED THE CITY COUNCIL OF THE CITY OF RANCHO CORDOVA does authorize the City Manager to execute Contract No. 58-2019 in an amount not to exceed $1,285,710 with Coastline Water Resources through June 30, 2022, and in a form approved by the City Attorney.

PASSED AND ADOPTED by the City Council of the City of Rancho Cordova on the 7th day of October, 2019 by the following vote:

AYES:

NOES:

ABSENT:

ABSTAIN:

_____
Robert J. McGarvey, Mayor

ATTEST:

_____
Stacy Leitner, CMC
City Clerk

FILE COPY

Ms. Dalia Fadl
City of Rancho Cordova
Department of Public Works
2729 Prospect Park Drive
Rancho Cordova, CA 95670

PROPOSAL

Storm Drain Maintenance Services
Due Date: September 5, 2019 at 4:00 PM

Name of the Proposer: Coastline Water Resources, Inc.
Mailing Address: 7225 26th Street, Rio Linda, CA 95673
Telephone Number: (916) 923-3437
Fax Number: (916) 929-5532
Submittal: Proposal

COASTLINE
WATER RESOURCES, INC.

COASTLINE
WATER RESOURCES, INC.

TABLE OF CONTENTS

Coastline Water Resources, Inc.

- Cover Letter
- A: Proposal Documents
    1. Cost Certification Form
    2. Cost Schedule
    3. Contractors License Certification
    4. Department of Industrial Relations Contractors Registration Form
    5. Firm Experience and Qualifications
    6. Employee/Staff Experience and Qualifications
    7. Designation of Subcontractors
    8. Operations Plan
    9. Exceptions
    10. Guarantee Retirements
    11. Non-Collusion Affidavit
    12. Signature Certification Page
- B: Addendums (N/A)
- C: Copy of Contractors License
- D: DIR Contractor Information
- E: Job Experience and Equipment List
- F: Organizational Chart, Staff Resumes and Job Descriptions
- G: Operations Plan
- H: Bid Bond
- I: Copies of Current Certificates of Insurances to City

COASTLINE
WATER RESOURCES, INC.

September 5, 2019

Ms. Dalia Fadl
Senior Civil Engineer
City of Rancho Cordova
2729 Prospect Park Drive
Rancho Cordova, Ca 95670

Subject: **Request for Proposal – Storm Drain Maintenance Services**

Dear Ms. Fadl:

Coastline Water Resources, Inc is pleased to present this Request for Proposal to the City of Rancho Cordova for routine maintenance and emergency storm drain services.

In this submittal we have provided all of the required proposal documents, including; Cost Certification Form, Cost Schedule, Contractors License Certification, Department of Industrial Relations Registration Form, Firm Experience and Qualifications, Employee Staff Experience & Qualifications, Designation of Subcontractors, Operations Plan, Exceptions Form, Bid Guarantee (Bid Bond), Non-Collusion Affidavit, Signature Certification Page, and acknowledgement of addenda's (if any). We have also included supplemental information in the appendices to this document, including; Copies of the California Contractors License and DIR Registration Information for Coastline, Additional Job Experience & Equipment Lists, Organizational Chart, along with Key Staff Resumes and Job Descriptions, a detailed Operations Plan, and our Bid Bond.

Coastline Water Resources is experienced with providing the services that you have outlined as part of the overall scope of work associated with this project. We have a strong base of experience in working with local government agencies, specifically in the field of Storm Drain Maintenance. As the City of Rancho Cordova's current Storm Drain Maintenance contractor we have a good understanding of what the city is looking for under this scope of work and have built a good rapport with the staff over the past 5 years, showing our ability to complete work in a timely manor, and to develop and cater to this program as the city sees fitting.

This project would be managed and supported by Coastline Water Resources from our headquarters, located in Rio Linda, CA.

Coastline Water Resources Storm Drain Program would be managed by, Natalie Jelavich. She has more than 15 years of overall industry experience and is responsible for working with clients to develop the best solutions. Ms. Jelavich, along with other licensed and experienced staff resources from our Sacramento area offices, will be able to effectively manage and deliver on the scope of work that the City of Rancho Cordova has outlined.

Ms. Dalia Fadl, Senior Civil Engineer
City of Rancho Cordova
September 5, 2019

In summary, Coastline Water Resources will continue to commit to this project a dedicated management team to implement the scope of work as defined in this proposal.

As the president of Coastline Water Resources, I executed this proposal and have the authority to commit our firm to any contract the results from this procurement process.

We have prepared our proposal to comply with the requirement of your Request and Specification for this new project.

Our contact for this procurement will be:

Mrs. Natalie Jelavich, Vice President/Operations Manager
Coastline Water Resources, Inc
7225 26th Street, Rio Linda, CA 95673
Telephone: 916/923-3437 Fax: 916/929-5532 Email: njelavich@coastlinewr.com

I encourage you to contact Ms. Jelavich or I should you have any questions regarding this proposal, or if you need any additional information. We very much look forward to your review of this proposal and the possibility of continuing our relationship with the city on the Storm Drain Maintenance Services Contract.

Sincerely,

Jeremy Jaeger
President
Coastline Water Resources, Inc.

Section A

Proposal Documents

SECTION 3
PROPOSAL SUBMITTAL CHECKLIST

Each submitted proposal shall include a completed (and signed where required) copy of each of the following checklist items. Any submitted proposal that fails to include any of the following may be deemed inadequate by the City of Rancho Cordova and may be grounds for dismissal of submittal at the City's sole discretion.

In addition to each item below, please include this page as a cover sheet. Please provide the below items in the same order as presented here.

_X_ Cost Certification Form (Section 4.1)

_X_ Cost Schedule (Section 4.2)

_X_ Contractor's License Certification (Section 5.1)

_X_ Department of Industrial Relations Contractors Registration Form (Section 5.2)

_X_ Firm Experience and Qualifications (Section 5.3)

_X_ Employee/Staff Experience & Qualifications (Section 5.4)

_X_ Designation of Subcontractors (Section 5.5)

_X_ Operations Plan (Section 5.6)

_X_ Exceptions (Section 6.1)

_X_ Guarantee Requirements (Bidder's Bond) (Section 6.2)

_X_ Non-Collusion Affidavit (Section 6.3)

_X_ Signature Certification Page (Section 6.4)

SECTION 4
COST SCHEDULE

COST CERTIFICATION FORM *(Required submittal form)*
The undersigned Authorized Signature certifies as follows:

All work for which this proposal is submitted is for Storm Drain Maintenance Services in accordance with all special provisions (including the payment of not less than the minimum wage rates set forth therein) and contract annexed hereto, and also in accordance with all Federal, State & local regulations as detailed in this Request for Proposals.

The undersigned, as proposer, declares that the only persons or parties interested in this proposal as principals are those named herein; that this proposal is made without collusion with any other person, firm, or corporation; that the proposer has carefully examined the location of the proposed work, the attached proposed form of contract, and documents herein referenced; and that the proposer agrees if this proposal is accepted, that he/she will contract with the City of Rancho Cordova, in the form of the copy of the contract attached hereto, to provide all necessary machinery, tools, apparatus and other necessary equipment, and to do all the work and furnish all the materials specified in the contract, in the manner and time therein prescribed, and according to the requirements of the Public Works Director as therein set forth, and that the proposer will take in full payment therefore the following amount to wit:

PROPOSAL GRAND TOTAL $ FOUR HUNDRED ONE THOUSAND, TWO HUNDRED AND FIFTY DOLLARS ($401,250.00)
(List total Proposal Grand Total from Cost Schedule – bottom line)

Company Name: Coastline Water Resources, Inc

Primary Contact: Natalie Jelavich Title: Vice President

Business Address: 7225 26th Street

City, State, Zip: Rio Linda, CA 95673

Telephone No.: 916-923-3437 Fax No: 916-929-5532

Email Address: njelavich@coastlinewr.com

Website Address: www.coastlinewr.com

Authorized Signature:

4.1 COST SCHEDULE *(Required submittal form)*

The following quantities are **approximate** only and are given for the purpose of comparing proposals. The City does not expressly or by implication agree that the actual amount of work will correspond with quantities given herein but reserves the right to increase and decrease the amount of any class or portion of the work as may be deemed necessary or advisable by the City. Payment will be based upon the actual quantities cleaned or repaired, unless otherwise specified. Maintenance rates may escalate annually based on San Francisco Engineering News- Record (ENR) Consumer Price Index (CPI) or, or 3%, whichever is less.

ITEM	DESCRIPTION	EST. YEARLY QUANTITY	UNIT	UNIT PRICE	ITEM TOTAL
1	Cleaning Structures & Pipe	175,000	LF	$2.00	$350,000
2	TV Inspection	7,500	FEET	$2.00	$15,000
3	Jetter/Vacuum Truck – Emergency Work	50	HOURS	$375	$18,750
4	Jetter/Vacuum Truck - Non-Emergency	50	HOURS	$350	$17,500
				TOTAL PROPOSAL	$ 401,250.00

Labor and Equipment Rates

The following hourly rates and equipment rates shall apply to all unscheduled maintenance and emergency response work that is not already included under the unit prices listed in the Cost Schedule (section 4.1). Hourly rates and equipment rates shall include all costs to supply the necessary labor costs, insurances, and equipment including, but not limited to, overhead and profit. The following quantities are **approximate** only and are given for the purpose of comparing proposals. The City does not expressly or by implication agree that the actual amount of work will correspond with quantities given herein but reserves the right to increase and decrease the amount of any class or portion of the work as may be deemed necessary or advisable by the City. Payment will be based upon the actual quantities of time and materials, unless otherwise specified. Labor and vehicle rates may escalate annually based on San Francisco (ENR) Consumer Price Index (CPI) or, or 3%, whichever is less.

Unscheduled Maintenance:

ITEM	DESCRIPTION	EST. YEARLY QUANTITY	UNIT	UNIT PRICE	ITEM TOTAL
Labor					
1	Foreman	12	HOURS	$89.00	$1068.00
2	Equipment Operator	12	HOURS	$87.00	$1044.00
3	Truck Driver	12	HOURS	$87.00	$1044.00
4	Laborer	12	HOURS	$75.00	$900.00
5	Flagman	12	HOURS	$75.00	$900.00
6	CCTV Operator	18	HOURS	$90.00	$1620.00
Equipment					

1	Pick Up	3	HOURS	$55.00	$165.00
2	Dump Truck	3	HOURS	$125.00	$375.00
3	Sign Truck	3	HOURS	$50.00	$150.00
4	Skid-Steer	3	HOURS	$65.00	$195.00
5	Excavator	3	HOURS	$130.00	$390.00
6	Back Hoe	3	HOURS	70.00	$210.00
7	Skip Loader	3	HOURS	$70.00	$210.00
8	Small Roller	3	HOURS	$55.00	$165.00
9	Large Roller	3	HOURS	$65.00	$195.00
10	Paver	3	HOURS	$280.00	$840.00
11	CCTV Inspection Truck	18	HOURS	$350.00	$6,300.00
				TOTAL PROPOSAL	$ 15,771.00

Emergency Response Work:

ITEM	DESCRIPTION	EST. YEARLY QUANTITY	UNIT	UNIT PRICE	ITEM TOTAL
Labor					
1	Foreman	8	HOURS	$98.00	$784.00
2	Equipment Operator	12	HOURS	$90.00	$1080.00
3	Truck Driver	12	HOURS	$90.00	$1080.00
4	Laborer	12	HOURS	$80.00	$960.00
5	Flagman	8	HOURS	$80.00	$640.00
6	CCTV Operator	8	HOURS	$105.00	$840.00
Equipment					
1	Pick Up	3	HOURS	$60.00	$180.00
2	Dump Truck	3	HOURS	$150.00	$450.00
3	Sign Truck	3	HOURS	$50.00	$150.00
4	Skid-Steer	3	HOURS	$70.00	$210.00
5	Excavator	3	HOURS	$143.00	$429.00
6	Back Hoe	3	HOURS	$75.00	$225.00
7	Skip Loader	3	HOURS	$75.00	$225.00
8	Small Roller	3	HOURS	$60.00	$180.00
9	Large Roller	3	HOURS	$72.00	$216.00
10	Paver	3	HOURS	$300.00	$900.00
11	CCTV Inspection Truck	8	HOURS	$375.00	$3,000.00
				TOTAL PROPOSAL	$ 11,549.00

SECTION 5

CONTRACTOR'S LICENSE, EXPERIENCE AND QUALIFICATIONS, AND OPERATIONS PLAN

5.1 CONTRACTOR'S LICENSE CERTIFICATION

Any person or entity submitting a proposal on this project to engage in the business or act in the capacity of a contractor shall be licensed as a contractor in accordance with the provisions of Division 3, Chapter 9 of the California Business and Professions Code at the time of proposal submittal. A proposal submitted to the City by a contractor who is not licensed as set forth above shall be considered non-responsive and shall be rejected by the City.

The Proposer shall provide in writing to the City their contractor's license number, name on the license, classification, and expiration date of the license with their proposal.

The first payment for work or material under any contract shall not be made unless and until the Registrar of Contractors verifies to the City that the records of the California Contractors' State License Board indicate that the contractor was properly licensed at the time the proposal was submitted and the license has remained in valid and good standing after award of the contract. Any proposer or contractor not so licensed shall be subject to all legal penalties imposed by law, including, but not limited to, any appropriate disciplinary action by the Contractors' State License Board. Failure of the proposer to maintain proper and adequate licensing for an award of a contract shall constitute a failure to execute the contract and shall result in the forfeiture of the security of the proposer.

CERTIFICATION

In accordance with the California Business and Professions Code, I do hereby, under Penalty of Perjury, certify that the following contractor's license information is true and correct.

Contractor's License No. 839041 **Expiration Date:** 05/31/2020

Contractor's Classification: A

Coastline Water Resources, Inc
Contractor's Name (Printed)

Proposer's Signature
(Same signature as on Proposal)

09.04.19
Date

Jeremy Jaeger
Proposer's Name (Printed)

CEO
Proposer's Title

*** Please see attached copy of our contracters lisense as listed in Section C

5.2 DEPARTMENT OF INDUSTRIAL RELATIONS CONTRACTORS REGISTRATION FORM

Any person or entity submitting a proposal on this project to engage in the business or act in the capacity of a contractor shall register as a contractor in accordance with the provisions of the Department of Industrial Relations (DIR). A proposal submitted to the City by a contractor who is not registered as set forth above shall be considered non-responsive and shall be rejected by the City.

Before awarding the contract for this project, the City must verify that the contractor was properly registered when the contractor submitted his/her proposal on this project. In order for the City to verify the registration status of a contractor, the contractor, at the time he/she submits his/her proposal for the project, shall provide in writing to the City his/her contractor's registration number, name on the registration, and expiration date of the registration.

No proposal submitted to the City shall be invalidated by the failure of the Proposer to be registered in accordance with the laws of this state. However, at the time the contract is awarded, the contractor shall be properly licensed in accordance with the laws of this state. Any Proposer or contractor not so registered shall be subject to all legal penalties imposed by law, including, but not limited to, any appropriate disciplinary action by the DIR. Failure of the Proposer to obtain proper and adequate registration for an award of a contract shall constitute a failure to execute the contract and shall result in the forfeiture of the security of the Proposer.

CERTIFICATION

In accordance with the DIR, we do hereby, under Penalty of Perjury, certify that the following contractor's registration information is true and correct.

Contractor's Registration No. 1000001124

Expiration Date: 06/30/19

Coastline Water Resources, Inc
Contractor's Name (Printed)

Proposer's Signature
(Same signature as on Proposal)

09.04.19
Date

Jeremy Jaeger
Proposer's Name (Printed)

CEO
Proposer's Title

*** Please see attached copy of our DIR Registration confirmation as listed in Section D

5.3 FIRM EXPERIENCE AND QUALIFICATIONS *(Required submittal form)*

The proposer has been engaged in the contracting business, under the present business name for 15 years. Experience in work of a nature similar to that covered in the proposal extends over a period of 23 years.

The proposer, as a Contractor, has never failed to satisfactorily complete a Contract awarded to it, except as follows:

Please provide written explanation on a separate sheet(s).

The following contracts related to the proposed Storm Drain Maintenance Services are currently active or have been satisfactorily completed in the last five (5) years. Please provide a contact name and person of reference for each of the contracts listed.

Contract Year(s)	Type of Work Performed	Contract Amount	Client/Agency Name	Contact Name /Title Phone Number
2010 - Present	Storm Drain Maintenance & Cleaning	$3,600,000	City of Citrus Heights	Regina Cave, Operation Manager 916.727.4736
2014- Present	Storm Drain Maintenance	$1,718,700	City of Rancho Cordova	Dalia Fadl, Senior Civil Engineer 916.851.8718
Sept 2017 - Jun 2018	Sanitary Sewer Condition Assessment Package V	$845,267	City of San Jose	Karen Vences, Project Engineer 408.535.3897
Oct 2017 - May 2018	Sanitary Sewer Condition Assessment Package IV	$929,946	City of San Jose	Thanh Vo, Project Engineer 408.793.4167
Dec 2017 - Sept 2018	Sanitary Sewer Condition Assessment Package III	$1,247,750	City of San Jose	Jason Day, Project Engineer 408.975.3248

5.4 EMPLOYEE/STAFF EXPERIENCE AND QUALIFICATIONS *(Required submittal form)*

Employee/Staff Name	Title & Position	Years w/ Firm	Years Experience in Trade	Specialized Certifications
Jeremy Jaeger	CEO	15	23	
Natalie Jelavich	Vice President	15	15	
Jason Anderson	VP of Estimating	15	27	
Chad Widener	Field Operations, Sacramento Area	12	17	NASSCO: PACP,MACP LACP MUTCD: Traffic Control, 1st Aid, CPR, AED
Ryan Summers	Field Operations, Bay Area	4	6	NASSCO: PACP,MACP LACP MUTCD: Traffic Control, 1st Aid, CPR, AED

Use additional sheets of paper as necessary for additional references or employees.

*** Please see additional Job Experience as listed in Section E
*** Please see additional information on Employee/Staff Experience, including Organization Chart, Resumes, and Job Descriptions as listed in Section F

5.5 DESIGNATION OF SUBCONTRACTORS *(Required submittal form)*

Each proposer shall set forth below the name and location of the place of business of each subcontractor who will perform work or labor or render service to the Contractor in or about the Services to be performed under these specifications in excess of one-half of one percent (0.5%) of the prime Contractor's total proposal or ten thousand dollars ($10,000.00), whichever is greater. The prime Contractor shall list the portion of the work which will be done by such Subcontractor.

If the Contractor fails to specify a subcontractor for any portion of the work to be performed under the Contract, the Contractor shall be deemed to have agreed to perform such portion itself, and the Contractor shall not be permitted to subcontract that portion of the work except under the conditions allowed by applicable law. Subcontractors shall provide all required licensing documentation. Failure to list subcontractors that will be preforming work under the contract shall be grounds to deem a proposal non-responsive.

SUBCONTRACTOR (Name & Location)	% OF WORK	ESTIMATED ANNUAL DOLLAR AMOUNT	WORK TO BE PERFORMED BY SUBCONTRACTOR
N/A			

5.6 OPERATIONS PLAN *(Required submittal forms)*

Equipment Inventory: Please provide a list of all equipment that will be utilized in the performance of this contract.

Quantity	Name, Type and Capacity	Make, Model, and Year	Condition and Mileage	Location
1	Hydro-flush Truck 3000/PSI12CY	2018 Vaccon Freightliner	Excellent/ 50,428	Sacramento, CA
1	Hydro-flush Truck 3000/PSI12CY	2018 Vaccon Freightliner	Excellent/ 50,325	Sacramento, CA
1	Hydro-flush Truck 3000/PSI12CY	2018 Vaccon Freightliner	Excellent/ 44,492	Sacramento, CA
1	Hydro-flush Truck 3000/PSI12CY	2015 Vaccon Freightliner	Excellent/ 89,517	Sacramento, CA
1	Hydro-flush Truck 3000/PSI12CY	2014 Vaccon International	Excellent/ 96,636	Sacramento, CA

*** A Full Equipment List has been provided in Section E

Equipment Storage and Maintenance Facility: Please provide the facility location(s) where the equipment utilized in this contract will be staged:

7225 26th Street
Street address

Rio Linda, CA 95673
City, State, Zip Code

Customer Service Call Center: Please list the address of the Customer Service center where calls will be received for this Contract:

7225 26th Street
Street address

Rio Linda, CA 95673
City, State, Zip Code

Will Customer Service representatives be available during normal business hours to answer calls? Y / N (*circle one*)

Emergency Response Plan: Please describe the emergency response plan for this contract. The plan should include who will be contacted, what number they will be contacted at, and where they will be responding from.

In the event of an emergency, City of Rancho Cordova dispatch/officials can reach Coastline

Water Resources staff on our 24 hour emergency line. This number rotates through staff members continually calling until they reach someone. Once a staff member answers they will take down the dispatch and make sure that an operator responds within 90 minutes. Please also note that we have a rotating list of "on call" staff that are based in the Sacramento area to guarantee fast response times. List the 24–hour emergency number if available (866) 575-5110 or (916) 282-5110

*** A Detailed Operations Plan has been provided in Section G

SECTION 6

EXCEPTIONS, GUARANTEES AND CERTIFICATIONS

6.1 EXCEPTIONS TO AGREEMENT *(Required submittal forms)*

Proposers are to prepare all Base Proposal Schedule forms (Section 4) based on the program specifications set forth in the RFP documents without considering any exceptions that may be set forth on this form. In the event the proposer takes exception to the RFP specifications they may set forth those exceptions in the following manner:

- The exceptions are to be presented on a separate paper titled, "Form Exceptions to Agreement".
- Each exception must be presented separately by stating: the specific exception, the page and line numbers of the exception, the suggested changes to the program related to the exception, the suggested changes in the Agreement language related to the exception, the manner in which the proposed change would benefit the City, the customers or both, and the specific dollar change in each of the various service rates, as proposed by the proposer in this RFP, that would take place if the exception was accepted by the City.
- The exceptions must be followed with the following language without exception.
- **"Except as set forth above, proposer is in complete agreement with the proposed terms, conditions and business arrangements described in the RFP including the attached Agreement. The proposer assumes the risk of all conditions foreseen or unforeseen and agrees to provide the services set forth in the Agreement under whatever circumstances may develop other than as herein provided."**
- The form must be signed by an individual authorized to commit the proposer's firm to the Agreement in the manner set forth below.

Date: 09.04.19

Name: Jermey Jaeger

Title: CEO

Signature: _____

Please note that if exceptions are taken, all required information as set forth above must be submitted. Exceptions taken without providing the required information will not be considered.

*** No Exceptions Taken

6.2 GUARANTEE REQUIREMENTS *(Required with submittal)*

The City of Rancho Cordova will require all proposals to be accompanied by a Proposal Guarantee in the form of cash, a certified check, a cashier's check, or a bidder's bond. The Proposal Guarantee shall be executed by an admitted surety insurer in favor of the City of Rancho Cordova, the amount of which shall not be less than ten percent (10%) of the Base Proposal Grand Total as indicated in **Section 4, Cost Schedule**.

Additionally, before beginning said work, the Contractor shall file one bond with the City, made payable to the City. The bond shall be issued by a surety company authorized to do business in the State of California and shall be maintained during the entire life of the Agreement at the expense of the Contractor. The bond shall be for not less than 100% of the full three (3) year contract term price and shall guarantee the faithful performance of the Agreement.

*** Please refer to Section H for a copy of our Bid Bond

6.3 NON-COLLUSION AFFIDAVIT *(Required with submittal)*

NONCOLLUSION AFFIDAVIT
(Title 23 United States Code Section 112 and
Public Contract Code Section 7106)

To the CITY of RANCHO CORDOVA
DEPARTMENT OF PUBLIC WORKS.

In conformance with Title 23 United States Code Section 112 and Public Contract Code 7106 the proposer declares that the proposal is not made in the interest of, or on behalf of, any undisclosed person, partnership, company, association, organization, or corporation; that the proposal is genuine and not collusive or sham; that the proposer has not directly or indirectly induced or solicited any other proposer to put in a false or sham proposal, and has not directly or indirectly colluded, conspired, connived, or agreed with any proposer or anyone else to put in a sham proposal, or that anyone shall refrain from bidding; that the proposer has not in any manner, directly or indirectly, sought by agreement, communication, or conference with anyone to fix the proposal price of the proposer or any other proposer, or to fix any overhead, profit, or cost element of the proposal price, or of that of any other proposer, or to secure any advantage against the public body awarding the contract of anyone interested in the proposed contract; that all statements contained in the proposal are true; and, further, that the proposer has not, directly or indirectly, submitted his or her proposal price or any breakdown thereof, or the contents thereof, or divulged information or data relative thereto, or paid, and will not pay, any fee to any corporation, partnership, company association, organization, proposal depository, or to any member or agent thereof to effectuate a collusive or sham proposal.

Note: The above Noncollusion Affidavit is part of the Proposal. Signing this Proposal on the signature portion thereof shall also constitute signature of this Noncollusion Affidavit.

Proposers are cautioned that making a false certification may subject the certifier to criminal prosecution.

Authorized Signature

Jeremy Jaeger
Name (Printed)

CEO
Title

09.04.19
Date

6.4 SIGNATURE CERTIFICATION PAGE *(Required with submittal)*

If proposer or other interested person is a corporation, state legal name of corporation, also names of the president, secretary, treasurer, and manager thereof; if a co-partnership, state true name of firm, also names of all individual co-partners composing the firm; if proposer or other interested person is an individual, state first and last names in full.

By my signature on this proposal I certify, under the Penalty of Perjury, that the foregoing Non-Collusion Affidavit and Contractor's License Certification along with all other statements in this proposal are true and correct.

Date: 09.04.19

Coastline Water Resources, Inc
Legal Company or Corporation Name

Corporation
Business Type (Corporation, Partnership, etc.)

Jeremy Jaeger
Print Name

Signature
CEO/President
Title

Natalie Jelavich
Print Name

Signature
Vice President
Title

Jeremy Jaeger
Print Name

Signature
Treasurer
Title

Natalie Jelavich
Print Name

Signature
Secretary
Title

Natalie Jelavich
Print Name

Signature
Operations Manager
Title

Print Name

Signature

Title

Section B

Addendums

Section C

Copy of Contractors License

CONTRACTORS STATE LICENSE BOARD

ACTIVE LICENSE

CONTRACTORS STATE LICENSE BOARD
ACTIVE LICENSE

License Number **839041** Entity CORP

Business Name COASTLINE WATER RESOURCES INC

Classifications(s) A

Expiration Date 05/31/2020 www.cslb.ca.gov

COASTLINE
WATER RESOURCES, INC.

Section D

DIR Registration Information

State of California
Department of Industrial Relations

(https://www.dir.ca.gov/)

Contractor Information

Legal Entity Name
COASTLINE WATER RESOURCES, INC
Legal Entity Type
Corporation
Status
Active
Registration Number
1000001124
Registration effective date
07/01/19
Registration expiration date
06/30/22
Mailing Address
7225 26TH STREET RIO LINDA 95673 CA United Sta...
Physical Address
7225 26TH STREET RIO LINDA 95673 CA United Sta...
Email Address
njelavich@coastlinewr.com
Trade Name/DBA
License Number (s)
CSLB:839041

Back to DIR>> (https://www.dir.ca.gov/)

Registration History

Effective Date	Expiration Date
06/05/18	06/30/19
06/19/17	06/30/18
05/19/16	06/30/17
06/17/15	06/30/16
09/02/14	06/30/15
07/01/19	06/30/22

Legal Entity Information

Corporation Entity Number: 2574359
Federal Employment Identification Number: 200691885
President Name: JEREMY JAEGER
Vice President Name: NATALIE JELAVICH
Treasurer Name:
Secretary Name:
CEO Name:

Agency for Service:
Agent of Service Name: JOHN BUSBY
Agent of Service Mailing Address: 251 LAFAYETTE CIR LAFAYETTE 94549 CA United States of America

Worker's Compensation

Do you lease employees through Professional Employer Organization (PEO)?: No
Please provide your current worker's compensation insurance information below:

	PEO Name	PEO Phone	PEO Email
PEO Information			

Insured by Carrier
Policy Holder Name: COASTLINE WATER RESOURCES, INC
Insurance Carrier: TRAVELERS
Policy Number: UB-0L625416-18-26-G
Inception date: 07/01/18
Expiration Date: 06/30/19

About DIR Work with Us Learn More

Section E

Job Experience and Equipment Listing

Related Work Experience

COASTLINE
WATER RESOURCES, INC.

In addition to projects listed and included on the Firm Experience and Qualifications Page of the Submittal Package, Coastline has cleaned and televised over 45 million linear feet of work throughout Northern California for a vast clientele. We have worked for many municipalities as well as private engineering contractors. Some of our clientele include companies such as Preston Pipelines, Inc., Sanco Pipelines, Inc., Mountain Cascade, Independent Construction, Inc., Blue Iron, Inc., Kiewit Pacific, Flat Iron Constriction, CC Myers, CH2M Hill, Lennar Communities, Davidon Homes, Steve P. Rados Co., and Richmond American Homes. We have worked throughout these jurisdictions:

- Central Contra Costa Sewer District
- City of Brentwood
- City of Citrus Heights
- City of Dublin
- City of Folsom
- City of Grass Valley,City of Lincoln
- City of Livermore
- City of Los Altos
- City of Mountain House
- City of Oakland
- City of Oakley
- City of Roseville
- City of Sacramento
- City of San Jose
- City of San Mateo
- City of South San Francisco
- City of Stockton
- City of Vacaville
- City of West Sacramento
- City of Woodland
- City of Yuba City
- Contra Cost Water District
- County of San Mateo
- El Dorado County DOT
- El Dorado Irrigation District
- North Tahoe Public Utilities District
- Placer County Department of Facility Services
- Sacramento Area Sewer District
- Sacramento County
- South Placer Municipal Utility District
- University of California, Davis
- Yolo County

We have also done a significant amount of work for the City of San Jose over the past 10 years, focusing on Sanitary Sewer Condition Assessments and Pipeline Repairs. As part of the city's program, Coastline has tv'd and cleaned over 3,000,000LF of pipe, and over $15,000,000 worth of work since 2010. Some of the most recent projects that we have completed for the city of San Jose within in the last 5 years are listed in the table below:

Location	Project Name	Engineer	Phone Number	Year Completed	Description of Work	Total Length (LF)
City of San Jose	SSCA: Forest Rosa	Michael Delelon	408.793.4127	2017	Clean & CCTV 10" Sewer & Smaller	237,000
City of San Jose	SSCA: Bayshore	James Thompson	408.793.4117	2016	Clean & CCTV 6" + Sewer	204,000
City of San Jose	SSCA: Japantown	Titus Raceles	408.793.5305	2015	Clean and CCTV 6" Sanitary Sewer	65,000
City of San Jose	SSCA: Central Areas	Mathew Tan	408.535.5670	2016	Clean and CCTV 8" Sewer	273,000
City of San Jose	SSCA: Willow Glen	Dustin Shitanishi	408.793.5117	2015	Clean and CCTV 6" Sewer	226,000
City of San Jose	SSCA: Package I	Amanda Lei	408.535.8478	2018	Clean and TV 8" & Smaller Sewer	160,000
City of San Jose	SSCA: Package II	Khanh Huynh	408.793.4144	2018	Clean and CCTV 12" and Smaller Sewer	153,350
City of San Jose	SSCA: Package III	Jason Day	408.975.3248	2018	Clean and CCTV 12" and Smaller Sewer	270,000
City of San Jose	SSCA: Package IV	Thanh Vo	408.793.4167	2018	Clean and CCTV 12" and Smaller Sewer	184,460
City of San Jose	SSCA: Package V	Karen Vences	408.535.3897	2018	Clean and CCTV 12" and Smaller Sewer	140,000

Additional References

We would be happy to provide you with additional references for work not captured in the project documents or above. This section was intended to highlight some of our private works contractors, jurisdictions worked in and San Jose because we feel that this showcases our ability to work in a very diverse environment, however we have completed a significant number of jobs in the past 5 years and so if you would like to see additional references we would be more than happy to provide that upon request.

Equipment List

Make	Model	Machine Serial #	Machine Arrangement #	Unit #	Last SMU	Year	Own/Rent
		Hydro-flush Trucks					
International	Vac-con	1HTWHAZT1CJ608357		H03		2012	Own/CWR
Freightliner	Vac-con	1FVHG3CY2FHGC7314		H04		2014	Own/CWR
International	Vac-con	3HAWHSUT5FL606064		H05		2015	Own/CWR
Sterling	Vac-con	2FXHATD347AY09595		H06		2006	Own/CWR
Freightliner	Vac-con	1FVHG3DV4JHJJ8274		H07		2018	Own/CWR
Freightliner	Vac-con	1FVHG3DV5JHJS1345		H08		2018	Own/CWR
Freightliner	Vac-con	1FVHG3DV5JHJS1346		H09		2018	Own/CWR
		CCTV Trucks					
Ford	F-550	1FDUF5HT7CEC62256		TV02		2012	Own/CWR
Ford	F-550	1FDUF5GTXEEA49516		TV03		2012	Own/CWR
Ford	F-550	1FDUF5GT9JDA02042		TV04		2018	Own/CWR
		Skidsteers					
Caterpillar	289D	TAW03187	345-5289	C289-001	1889	2015	Owned/MJEC
Caterpillar	289D	TAW03254	345-5289	C289-002	2462	2015	Owned/MJEC
Caterpillar	289D	TAW03381	345-5289	C289-003	1468	2015	Owned/MJEC

Equipment List

Make	Model	Machine Serial #	Machine Arrangement #	Unit #	Last SMU	Year	Own/Rent
Caterpillar	289D	TAW07720	345-5289	C289-004	462	2017	Owned/MJEC
Komatsu	SK1020	37CTF216		K1020-001	1833	2003	Owned/MPI
		Excavators					
Caterpillar	305E2	H5M05898	515-6961	C305-002	712	2018	Owned/MJEC
Caterpillar	308E	FJX04246	418-3302	C308-001	2697	2015	Owned/MJEC
Caterpillar	318E	WZS00278	370-7608	C318-001	2423	2015	Owned/MJEC
Caterpillar	318E	WZS00300	370-7608	C318-002	2622	2015	Owned/MJEC
Caterpillar	320D	SPN01182	340-3776	C320-001	5698	2011	Owned/MPI
Caterpillar	320E	WBK00483	341-5378	C320-002	3542	2012	Owned/MJEC
Caterpillar	320E	WBK00908	369-4385	C320-003	6428	2012	Owned/MPI
Caterpillar	320E	WBK00922	369-4385	C320-004	7073	2012	Owned/MPI
Caterpillar	320E	WBK01145	369-4384	C320-005	3858	2013	Owned/MPI
Caterpillar	320E	WBK01222	369-4384	C320-006	3427	2014	Owned/MJEC
Caterpillar	320E	WBK01249	369-4384	C320-007	4069	2014	Owned/MJEC
Caterpillar	320E	WBK01654	369-4385	C320-008	5443	2013	Owned/MPI
Caterpillar	320E	WBK02034	341-5378	C320-009	5609	2013	Owned/MPI
Caterpillar	320-7	HEX00433	532-9508	C320-010	620	2018	Owned/MJEC

Equipment List

Make	Model	Machine Serial #	Machine Arrangement #	Unit #	Last SMU	Year	Own/Rent
Caterpillar	320-7	HEX01338	544-4532	C320-011	917	2018	Owned/MJEC
Caterpillar	320-7	HEX01743	544-4532	C320-012	1048	2018	Owned/MJEC
Caterpillar	323F	YEJ00433	482-1170	C323-001	1842	2016	Owned/MJEC
Caterpillar	323F	YEJ00465	482-1170	C323-002	1581	2016	Owned/MJEC
Caterpillar	323-7	RAZ00828	544-4533	C323-003	588	2018	Owned/MJEC
Caterpillar	323-7	RAZ00829	544-4533	C323-004	611	2018	Owned/MJEC
Caterpillar	323-7	RAZ00845	544-4533	C323-005	541	2018	Owned/MJEC
Caterpillar	349E	TFG00274	331-7815	C349-001	7489	2011	Owned/MPI
Caterpillar	349E	TFG00275	331-7815	C349-002	8644	2011	Owned/MPI
Caterpillar	349E	TFG00276	331-7815	C349-003	7332	2011	Owned/MPI
Caterpillar	349E	TFG00415	331-7815	C349-004	5949	2012	Owned/MJEC
Caterpillar	349E	TFG00499	331-7815	C349-005	5885	2012	Owned/MJEC
Caterpillar	349E	TFG00529	331-7815	C349-006	7577	2012	Owned/MJEC
Caterpillar	349E	TFG00815	331-7815	C349-007	7629	2013	Owned/MPI
Caterpillar	349E	TFG00816	331-7815	C349-008	6888	2013	Owned/MPI
Caterpillar	349E	TFG00819	331-7815	C349-009	7267	2013	Owned/MPI
Caterpillar	349E	TFG00890	425-4913	C349-010	6644	2014	Owned/MJEC
Caterpillar	349F	HPD00203	384-2182	C349-011	4150	2015	Owned/MJEC

Equipment List

Make	Model	Machine Serial #	Machine Arrangement #	Unit #	Last SMU	Year	Own/Rent
Caterpillar	349F	HPD00596	384-2182	C349-012	1962	2016	Owned/MJEC
Caterpillar	349F	HPD00676	384-2182	C349-013	2809	2016	Owned/MJEC
Caterpillar	349F	HPD00127	384-2182	C349-014	5177	2015	Owned/MJEC
Caterpillar	349F	HPD00593	384-2182	C349-015	2610	2016	Owned/MJEC
Caterpillar	349F	HPD00663	384-2182	C349-016	2305	2016	Owned/MJEC
Caterpillar	349F	HPD00286	384-2182	C349-017	2781	2016	Owned/MJEC
Caterpillar	349F	HPD00321	384-2182	C349-018	2658	2015	Owned/MJEC
Caterpillar	349F	HPD00650	384-2182	C349-019	2624	2016	Owned/MJEC
Caterpillar	349F	HPD10231	505-4696	C349-020	1899	2017	Owned/MJEC
Caterpillar	349F	HPD20075	505-4696	C349-021	1740	2018	Owned/MJEC
Caterpillar	349F	HPD20029	505-4696	C349-022	1590	2018	Owned/MJEC
Caterpillar	349F	HPD00322	384-2182	C349-023	2180	2014	Owned/MJEC
Caterpillar	349F	HPD00541	477-4133	C349-024	2359	2016	Owned/MJEC
Caterpillar	349F	HPD00592	384-2182	C349-025	3546	2016	Owned/MJEC
Caterpillar	349F	HPD00600	384-2182	C349-026	1602	2016	Owned/MJEC
Caterpillar	349F	HPD20120	505-4696	C349-027	1256	2018	Owned/MJEC
Caterpillar	349F	HPD20121	505-4696	C349-028	1671	2018	Owned/MJEC
Caterpillar	349F	HPD20154	505-4696	C349-029	1109	2018	Owned/MJEC

Equipment List

Make	Model	Machine Serial #	Machine Arrangement #	Unit #	Last SMU	Year	Own/Rent
Caterpillar	349F	HPD20157	505-4696	C349-030	1320	2018	Owned/MJEC
Caterpillar	349F	HPD20159	505-4696	C349-031	1362	2018	Owned/MJEC
Caterpillar	349F	HPD20160	505-4696	C349-032	1147	2018	Owned/MJEC
Caterpillar	349F	HPD20164	505-4696	C349-033	1263	2018	Owned/MJEC
Caterpillar	349F	HPD20165	505-4696	C349-034	1326	2018	Owned/MJEC
Caterpillar	349F	HPD20166	505-4696	C349-035	1068	2018	Owned/MJEC
Caterpillar	349F	HPD20167	505-4696	C349-036	900	2018	Owned/MJEC
Caterpillar	349F	KEA20004	529-3599	C349-037	930	2018	Owned/MJEC
Caterpillar	349F	HPD20134	529-3599	C349-038	1173	2018	Owned/MJEC
Caterpillar	349F	HPD20183	505-4696	C349-039	1047	2018	Owned/MJEC
Caterpillar	349F	HPD20241	505-4696	C349-040	927	2018	Owned/MJEC
Caterpillar	349F	HPD20256	505-4696	C349-041	665	2018	Owned/MJEC
Caterpillar	349F	HPD20266	505-4696	C349-042	714	2018	Owned/MJEC
Caterpillar	349F	HPD20252	505-4696	C349-043	809	2018	Owned/MJEC
Caterpillar	349F	HPD20268	505-4696	C349-044	801	2018	Owned/MJEC
Caterpillar	349F	HPD20261	505-4696	C349-045	656	2018	Owned/MJEC
Caterpillar	349F	HPD20542	505-4696	C349-046	204	2019	Owned/MJEC
Caterpillar	349F	HPD20543	505-4696	C349-047	62	2019	Leased

Equipment List

Make	Model	Machine Serial #	Machine Arrangement #	Unit #	Last SMU	Year	Own/Rent
Caterpillar	349F	HPD20544	505-4696	C349-048	212	2019	Owned/MJEC
Caterpillar	349F	HPD20545	505-4696	C349-049	236	2019	Owned/MJEC
Caterpillar	349F	HPD20546	505-4696	C349-050	262	2019	Owned/MJEC
Caterpillar	349F	HPD20547	505-4696	C349-051	220	2019	Owned/MJEC
Caterpillar	349F	HPD20548	505-4696	C349-052	224	2019	Leased
Caterpillar	349F	HPD20549	505-4696	C349-053	53	2019	Leased
Caterpillar	349F	HPD20550	505-4696	C349-054	176	2019	Leased
Caterpillar	349F	HPD20551	505-4696	C349-055	300	2019	Leased
Caterpillar	349F	HPD00809	384-2182	C349-056	1789	2016	Leased
Caterpillar	349F	HPD20727	505-4696	C349-057	5	2019	Leased
Caterpillar	349F	HPD20679	505-4696	C349-058	8	2019	Leased
Caterpillar	374F	DNM00414	376-9612	C374-001	2569	2016	Owned/MJEC
Caterpillar	390F	MGF00324	487-3691	C390-001	3069	2016	Owned/MJEC
Caterpillar	390F	FEH20007	524-2076	C390-002	973	2017	Owned/MJEC
Caterpillar	390F	FEH10070	524-2076	C390-003	1383	2017	Owned/MJEC
Caterpillar	390F	FEH20018	510-8635	C390-004	1046	2018	Owned/MJEC
Caterpillar	390F	HNG00174	557-9552	C390-005	790	2018	Owned/MJEC
Caterpillar	390F	HNG00181	557-9552	C390-006	599	2018	Owned/MJEC

Equipment List

Make	Model	Machine Serial #	Machine Arrangement #	Unit #	Last SMU	Year	Own/Rent
Caterpillar	390F	MGF00326	487-3691	C390-007	2682	2016	Owned/MJEC
Caterpillar	390F	HNG00220	557-9552	C390-008	67	2018	Leased
Caterpillar	390F	HNG00276	557-9552	C390-009	99	2019	Leased
Caterpillar	390F	HNG00277	557-9552	C390-010	291	2019	Leased
Caterpillar	390F	HNG00278	557-9552	C390-011	210	2019	Leased
		Backhoes					
Caterpillar	420F	SKR02705	340-1678	C420-001	2139	2014	Owned/MJEC
Caterpillar	420F	SKR01213	340-1678	C420-002	5113	2013	Owned/MPI
Caterpillar	420E	DJL01348	364-6133	C420-003	4933	2011	Owned/MJEC
Caterpillar	420E	DJL01497	364-6133	C420-004	1262	2011	Owned/MPI
Caterpillar	420E	DJL01544	364-6133	C420-005	5174	2011	Owned/MJEC
Caterpillar	420F	SKR01095	340-1678	C420-006	1327	2013	Owned/MPI
Caterpillar	420F	SKR01146	340-1678	C420-007	742	2013	Owned/MPI
Caterpillar	420F2	HWC00358	450-8448	C420-008	2713	2015	Owned/MPI
Caterpillar	420F	SKR02694	340-1678	C420-009	2984	2014	Owned/MJEC
Caterpillar	420F	SKR02691	340-1678	C420-010	1475	2014	Owned/MJEC
Caterpillar	420F	SKR02716	340-1678	C420-011	2061	2014	Owned/MJEC

Equipment List

Make	Model	Machine Serial #	Machine Arrangement #	Unit #	Last SMU	Year	Own/Rent
Caterpillar	420F	SKR02318	340-1678	C420-012	2092	2013	Owned/MJEC
Caterpillar	420F	SKR03464	340-1678	C420-013	2332	2014	Owned/MJEC
Caterpillar	420F	SKR03728	340-1678	C420-014	2579	2014	Owned/MJEC
Caterpillar	420F	SKR03733	340-1678	C420-015	2680	2014	Owned/MJEC
Caterpillar	420F2	HWC01362	450-8448	C420-016	1754	2016	Owned/MJEC
Caterpillar	420F2	HWC01452	450-8448	C420-017	1268	2016	Owned/MJEC
Caterpillar	420F	SKR03114	340-1678	C420-018	2200	2014	Leased
Caterpillar	420F	SKR03116	340-1678	C420-019	2000	2014	Leased
		Articulated Trucks					
Caterpillar	745C	TFK01046	378-6447	C745-002	4244	2016	Owned/MJEC
		Wheel Loaders					
Caterpillar	950H	K5K00228	237-0230	C950-001	10513	2006	Owned/MPI
Caterpillar	950H	JAD00522	342-7355	C950-002	7573	2011	Owned/MJEC
Caterpillar	950H	JAD00605	360-5885	C950-003	7276	2011	Owned/MJEC
Caterpillar	950K	R4A00435	314-9191	C950-004	5958	2012	Owned/MJEC
Caterpillar	950K	R4A01314	314-9191	C950-005	5588	2013	Owned/MJEC

Equipment List

Make	Model	Machine Serial #	Machine Arrangement #	Unit #	Last SMU	Year	Own/Rent
Caterpillar	950M	EMB01018	360-7932	C950-006	3875	2015	Owned/MJEC
Caterpillar	950H	K5K00796	237-0230	C950-007	4457	2006	Owned/MJEC
Caterpillar	950M	EMB00749	360-7932	C950-008	3348	2015	Owned/MJEC
Caterpillar	950M	EMB03988	360-7932	C950-009	1211	2017	Owned/MJEC
Caterpillar	950M	J1S00406	513-5376	C950-010	1413	2017	Owned/MJEC
Caterpillar	950M	J1S00399	513-5376	C950-011	1015	2017	Owned/MJEC
Caterpillar	966M	KJP01036	361-1910	C966-001	3791	2015	Owned/MJEC
Caterpillar	966M	KJP01037	361-1910	C966-002	3363	2015	Owned/MJEC
Caterpillar	966M	KJP01666	361-1910	C966-003	3356	2016	Owned/MJEC
Caterpillar	966M	KJP02693	361-1910	C966-004	328	2018	Owned/MJEC
Caterpillar	966M	KJP02750	361-1610	C966-005	1487	2018	Owned/MJEC
Caterpillar	966M	KJP02804	361-1610	C966-006	1837	2018	Owned/MJEC
Caterpillar	966M	KJP02876	361-1910	C966-007	1258	2018	Owned/MJEC
Caterpillar	966M	KJP02830	361-1910	C966-008	1193	2018	Owned/MJEC
Caterpillar	966M	KJP01285	361-1910	C966-009	1855	2016	Owned/MJEC
Caterpillar	966M	EJA01644	361-1910	C966-010	211	2017	Owned/MJEC
Caterpillar	966M	KJP02516	361-1910	C966-011	2001	2017	Leased

Equipment List

Make	Model	Machine Serial #	Machine Arrangement #	Unit #	Last SMU	Year	Own/Rent
		Roller					
Caterpillar	CB22	22000215	293-2777	C22-001	1713	2008	Owned/MPI
Caterpillar	CB22B	41900155	364-2263	C22-002	874	2015	Owned/MJEC
		Dozer					
Caterpillar	D6T	GMK00370	354-8621	CD6T-001	2286	2011	Owned/MJEC
		Compactors					
Rexpactor	SP-3F	5801-134	SP30535	REX-001	496	2017	Owned/MJEC
Rexpactor	SP-3F	5801-139	SP30536	REX-002	584	2017	Owned/MJEC
Rexpactor	SP-3F	5801-136	SP30536	REX-003	375	2017	Owned/MJEC
Rexpactor	SP-3F	5801-116	SP30525	REX-004	93	2017	Owned/MJEC
Caterpillar	815F2	BYN00940	236-1126	C815-001	3674	2013	Owned/MJEC
Caterpillar	815F2	BYN01149	236-1126	C815-002	2607	2015	Owned/MJEC
Caterpillar	815F2	BYN00691	368-9293	C815-003	1549	2012	Owned/MJEC
		Air Compressors					
Sullivan Palatek	D185P3	102711		AC-001	522	2016	Owned/MPI

Equipment List

Make	Model	Machine Serial #	Machine Arrangement #	Unit #	Last SMU	Year	Own/Rent
Ingersoll Rand	Air Source 185	4FVCABAA77U387259		AC-002	2377		Owned/MPI
Sullivan Palatek	D185P3	100967		AC-003	278	2012	Owned/MPI
Atlas Copco	XAS185	4500A1015DR045311	S/N 8972426145	AC-004	916	2013	Owned/MPI
Atlas Copco	XAS185	4500A1017DR043382	S/N 8972426048	AC-005	1463		Owned/MPI
Atlas Copco	XAS185	4500A1016BR036047	S/N 8972426048	AC-006	2088		Owned/MPI
Atlas Copco	XAS185	4500A1010BR036044	S/N 8972426048	AC-007	217	2011	Owned/MPI
Atlas Copco	XAS185	4500A1011GR052390		AC-008	582	2016	Owned/MPI
Ingersoll Rand	Air Source 185	4FVCABAA97U388395	S/N 388395UFRB01	AC-009	2341		Owned/MPI
Sullivan Palatek	D185P3	102521			Stolen 9/5/2017	2016	Owned/MPI
Sullivan Palatek	D185P3	102714		AC-010	462	2016	Owned/MPI
Sullivan Palatek	D185P3	102519		AC-011	794	2016	Owned/MPI
Sullivan Palatek	D185P3	102517		AC-012	858	2016	Owned/MPI
Sullivan Palatek	D185P3	102720		AC-013	269	2016	Owned/MPI
Atlas Copco	XAS185	HOP053893	4500A1018HR053893	AC-014	264	2017	Owned/MPI
Atlas Copco	XAS185	HOP053913		AC-015	827	2017	Owned/MPI
Atlas Copco	XAS185	HOP053916		AC-016	361	2017	Owned/MPI
Atlas Copco	XAS185	HOP053917	4500A1019GR053917	AC-017	465	2017	Owned/MPI
Atlas Copco	XAS185	HOP053857	4500A1016GR053857	AC-018	77	2016	Owned/MPI

Equipment List

Make	Model	Machine Serial #	Machine Arrangement #	Unit #	Last SMU	Year	Own/Rent
Sullivan Palatek	D185PIZ4	35006	4YAHH1110JM002196	AC-019	117	2018	Owned/MPI
Sullivan Palatek	D185PIZ4	35008	4YAHH1114JM002332	AC-020	108	2018	Owned/MPI
Rotair	D185T4F	C41109	1F91A1211JC445413	AC-021	86	2018	Owned/MPI
Rotair	D185T4F	C41175	1F91A1218JC445554	AC-022	109	2018	Owned/MPI
Rotair	D185T4F	C41110	1F91A1216JC445553	AC-023	130	2018	Owned/MPI
Rotair	D185T4F	C41105	1F91A1214JC445552	AC-024	94	2018	Owned/MPI
Sullivan Palatek	D185PIZ4	35009	4YAHH1116JM002333	AC-025	36	2018	Owned/ MPI
Rotair	D185T4F	C42352		AC-026	1	2019	Owned/MPI
Rotair	D185T4F	C42339		AC-027	1	2018	Owned/MPI
		Generators					
Caterpillar	XQ35 28KW	JK700127	1U9BU1214FJ087118	GEN-001	9355	2015	Owned/MPI
Atlas Copco	GEN 19-24KW	HOP120173	5632F1116FM014061	GEN-002	980	2016	Owned/MPI
Multiquip	GEN 19-24KW	7153969		GEN-003	3725	2017	Owned/MPI
Multiquip	GEN 19-24KW	7154659		GEN-004	1711	2018	Owned/MPI
		Water Wagons/Towers					
Multiquip	WT5C			WT-001			Owned/MPI

Equipment List

Make	Model	Machine Serial #	Machine Arrangement #	Unit #	Last SMU	Year	Own/Rent
Multiquip	WT5C	39971		WT-002			Owned/MPI
Valew	12,000 Gal Tank	WT12K00110		WT-003		2015	Owned/MJEC
Valew	12,000 Gal Tank	WT12K00130		WT-004		2015	Owned/MJEC
Valew	12,000 Gal Tank	WT12K00112		WT-005		2015	Owned/MJEC
Valew	12,000 Gal Tank	WT12K00129		WT-006		2015	Owned/MJEC
Valew	12,000 Gal Tank	WT12K18040		WT-007		2018	Owned/MJEC
Valew	12,000 Gal Tank	WT12K18038		WT-008		2018	Owned/MJEC
Valew	12,000 Gal Tank	WT12K18039		WT-009		2018	Owned/MJEC
Valew	12,000 Gal Tank	WT12K18006		WT-010		2018	Owned/MJEC
Valew	12,000 Gal Tank	WT12K18007		WT-011		2018	Owned/MJEC
Valew	12,000 Gal Tank	WT12K18019		WT-012		2018	Owned/MJEC
		J-Stands					
Irrigation Eng.	6" J-Stand	Pac Machine Company	11' Vertical Clearance	J-001			Owned/MPI
Irrigation Eng.	6" J-Stand	WSA Compliance LLC	11' Vertical Clearance	J-002			Owned/MPI
Irrigation Eng.	6" J-Stand	WSA Compliance LLC	11' Vertical Clearance	J-003			Owned/MPI
Irrigation Eng.	6" J-Stand	WSA Compliance LLC	11' Vertical Clearance	J-004			Owned/MPI
Irrigation Eng.	6" J-Stand	WSA Compliance LLC	11' Vertical Clearance	J-005			Owned/MPI

Equipment List

Make	Model	Machine Serial #	Machine Arrangement #	Unit #	Last SMU	Year	Own/Rent
Irrigation Eng.	6" J-Stand	WSA Compliance LLC	11' Vertical Clearance	J-006			Owned/MPI
Irrigation Eng.	6" J-Stand	WSA Compliance LLC	11' Vertical Clearance	J-007			Owned/MPI
		Coastline Water Trucks					
Ford	F-650	3FRNF65C56V379865		FWT-001	344	2006	Own/CWR
Freightliner	M2	1FVACWDD87HW67619		FWT-002		2007	Own/CWR
Freightliner	M2	1FVACWDD27HW67843		FWT-003		2007	Own/CWR
Freightliner	M2	1FVACWDD57HV82446		FWT-004		2006	Own/CWR
Freightliner	M2	1FVACWDD37HW67592		FWT-005		2007	Own/CWR
Freightliner	M2	1FVACWDD57HW67660		FWT-006		2007	Own/CWR
Freightliner	M2	3ALACWDU6HDJG6151		FWT-007		2017	Own/CWR
Freightliner	M2	1FVACWDD77HW67837		FWT-008	5807	2007	Own/CWR
Freightliner	M2	1FVACWDD37HW67608		FWT-009		2007	Own/CWR
Freightliner	M2	1FVACWDDX7HW67685		FWT-010		2007	Own/CWR
Freightliner	M2	1FVACWDDX7HW67668		FWT-011	4143	2007	Own/CWR
Freightliner	M2	1FVACWDD37HV82199		FWT-012		2006	Own/CWR
Freightliner	M2	3ALACWDU0GDFY3271		FWT-013		2015	Own/CWR
Freightliner	M2	3ALACWDUXFDFY3292		FWT-014		2015	Own/CWR

Equipment List

Make	Model	Machine Serial #	Machine Arrangement #	Unit #	Last SMU	Year	Own/Rent
Freightliner	M2	3ALACWDU5FDFY3295		FWT-015		2015	Own/CWR
Freightliner	M2	3ALACWDU2FDFY3299		FWT-016		2015	Own/CWR
Freightliner	M2	3ALACWDU5FDFY3300		FWT-017		2015	Own/CWR
International	4300	3HAJTSKM1DL257079		FWT-018		2012	Own/CWR
International	4300	3HAJTSKM0DL257073		FWT-019		2012	Own/CWR
International	4300	3HAJTSKM1EL769121		FWT-020		2014	Own/CWR
Freightliner	M2	3ALACWDU7GDGT8444		FWT-021		2016	Own/CWR
Freightliner	M2	3ALACWDU5GDGT8443		FWT-022		2016	Own/CWR
Freightliner	M2	3ALACWDU0GDGT8446		FWT-023		2016	Own/CWR
Freightliner	M2	3ALACWDU4GDGT8448		FWT-024		2016	Own/CWR
Freightliner	M2	3ALACWDU5GDGT8457		FWT-025		2016	Own/CWR
Freightliner	M2	3ALACWDU8HDJG6149		FWT-026		2017	Own/CWR
Freightliner	M2	3ALACWDU1HDHX7096		FWT-027		2016	Own/CWR
Freightliner	M2	3ALACWDU1HDJG6154		FWT-028		2016	Own/CWR
Freightliner	M2	3ALACWDU6GDGT8452		FWT-029		2016	Own/CWR
International	4300	3HAJTSKM3EL769119		FWT-030		2014	Own/CWR
Freightliner	M2	3ALACWFD2LDLE7611		FWT-031		2020	Own/CWR
Freightliner	M2	3ALACWFD2LDLP0228		FWT-032		2020	Own/CWR

Equipment List

Make	Model	Machine Serial #	Machine Arrangement #	Unit #	Last SMU	Year	Own/Rent
Freightliner	M2	3ALACWFD1LDLP0267		FWT-033		2020	Own/CWR
Freightliner	M2	3ALACWFD8LDLP0265		FWT-034		2020	Own/CWR
Freightliner	M2	3ALACWFD2LDLP0245		FWT-035		2020	Own/CWR
Freightliner	M2	3ALACWFD4LDLE7609		FWT-036		2020	Own/CWR
Freightliner	M2	3ALACWFD5LDLP0269		FWT-037		2020	Own/CWR
Freightliner	M2	3ALACWFD8LDLE7614		FWT-038		2020	Ordered
Freightliner	M2	3ALACWFD3LDLE7651		FWT-039		2020	Ordered
Freightliner	M2	3ALACWFD0LDLE7655		FWT-040		2020	Ordered
		Shade Trailers					
Monty's Portables	Shade Trailer			MST-001		2018	Owned
Monty's Portables	Shade Trailer			MST-002		2018	Owned
Monty's Portables	Shade Trailer			MST-003		2018	Owned
Monty's Portables	Shade Trailer			MST-004		2018	Owned
Monty's Portables	Shade Trailer			MST-005		2018	Owned
Monty's Portables	Shade Trailer			MST-006		2018	Owned
Monty's Portables	Shade Trailer			MST-007		2018	Owned
Monty's Portables	Shade Trailer			MST-008		2018	Owned

Equipment List

Make	Model	Machine Serial #	Machine Arrangement #	Unit #	Last SMU	Year	Own/Rent
Monty's Portables	Shade Trailer			MST-009		2018	Owned
Monty's Portables	Shade Trailer			MST-010		2019	Owned
Monty's Portables	Shade Trailer			MST-011		2019	Owned
Monty's Portables	Shade Trailer			MST-012		2019	Owned
Monty's Portables	Shade Trailer			MST-013			Ordered
Monty's Portables	Shade Trailer			MST-014			Ordered
Monty's Portables	Shade Trailer			MST-015			Ordered
Monty's Portables	Shade Trailer			MST-016			Ordered
		Light Tower					
Magnum	MLT3060	62527	5AJLS161068005600	LT-001		2006	Owned/MPI
		Sweepers					
Lay-Mor	3 Wheel Boom	8HC-31272				2006	Owned/MPI
Terramite	3 Wheel Boom	21TS0312			1279		Owned/MPI
		Mixer					
Whiteman	WM90PH8	H2859155				2009	Owned/MPI

Equipment List

Make	Model	Machine Serial #	Machine Arrangement #	Unit #	Last SMU	Year	Own/Rent

Section F

Organizational Chart, Key Staff Resumes, Job Descriptions

Employee Staff Experience and Qualifications:

In this section we have provided you with resumes for the "key" staff members whom we believe will be working closely with city personnel on this project. We have also attached an organizational chart in which you can see that we have a number of other employees that support our operations. Resumes and/or job descriptions for the employees that were not included in this section may be provided upon request.

Coastline Water Resources, Inc

Staff Organization Chart

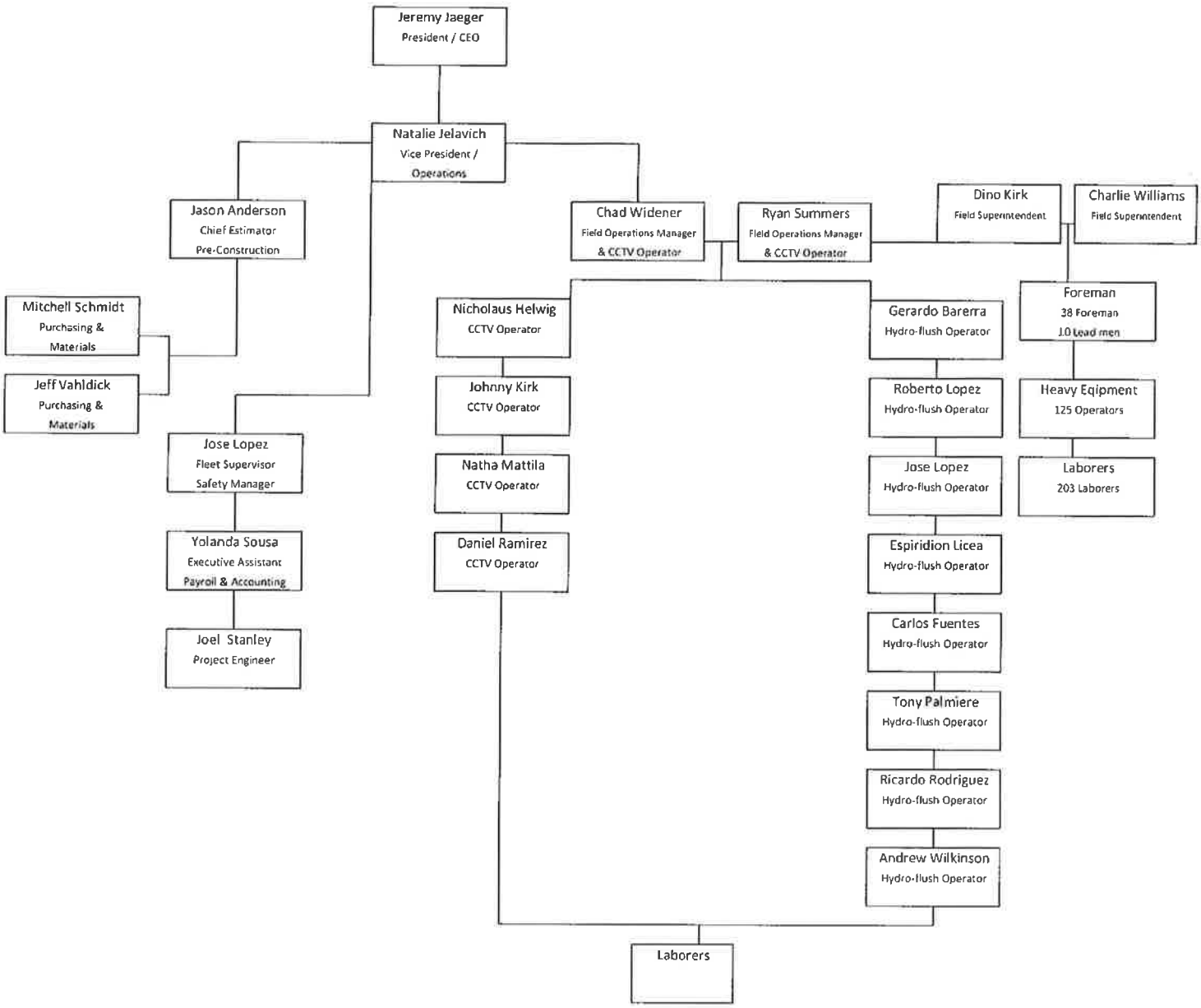

Natalie Jelavich Day

Vice President/Operations Manager

COASTLINE
WATER RESOURCES, INC.

Education/Training:

Bachelor of Arts, California State University, Sacramento
2004

Background:

Ms. Jelavich has been with Coastline Water Resources since 2004 and currently serves as Vice President and Operations Manager. In this position she supports key staff and clientele by managing all projects in the region for both municipal and private clientele.

Ms. Jelavich has over 15 years of management experience. The purpose of her role is to contribute to the success and profitability of projects by working directly with clientele to assure the highest quality of customer service and satisfaction. Other duties include contract negotiation and services, financial services such as billing, payments and scheduling. This role also provides ongoing feedback to our Field Superintendent to assure that field personnel continue to provide quality workmanship as well as accurate results for services performed.

Ms. Jelavich has been a part of the Coastline Water Resources ongoing Storm Drain Maintenance Project with both the City of Citrus Heights as well as the City of Rancho Cordova since both programs began in 2010 and 2014. Under this long-term agreement with the City, Coastline Water Resources provides Storm Drain Maintenance Services for all of the city's pipeline structures, creeks and culverts. We have assisted the city in developing a Storm Drain Assessment plan, which helps them to track problematic lines and areas, as well as maintain pipeline structures. In addition, Ms. Jelavich has managed numerous other projects for both private engineers and municipalities, using her expertise to assure that all projects come in on time and on budget. Some of her other responsibilities include, incorporating changing procedures or coming up with better solutions to clients changing needs, communicating policies, procedures and standards, working with field crews to establish timelines and complete projects in accordance to business and company standards, working with clientele to negotiate contracts and services, bid proposals, ensuring that internal administrative organization is in line with company standards, making sure that insurance bonding , budgeting, payroll and billings are all accurately executed, working as a liaison between private contractors and municipalities to complete specified projects and reporting, and assisting in project acceptance.

Key Experience:

2010- Present — **Storm Drain Maintenance Services**
City of Citrus Heights

Under this contract Ms. Jelavich has managed the cleaning operations of approximately 1,800,000 linear feet of Storm Drain and over $1,200,000 in additional repair work throughtout the past 9 years. In addition to pipeline structure work, under her supervision Coastline staff performed creek cleaning at a number of locations, Closed Circuit Television Assessments and emergency work.

2014- Present — **Storm Drain Maintenance Services**
City of Rancho Cordova

Ms. Jelavich managed the cleaning operations of approximately 1,000,000 linear feet of pipe over a 5 year period for the City of Rancho Cordova. Her staff was in charge of working along large arterial roadways and cleaning all of the city's Storm Drain Structures 24" and below over the past 5 years. Staff had to work closely on this project to assure safety and clean pipe conditions so to mitigate problems during the wet season.

Over the course of her tenure, Ms. Jelavich has managed over $61 million dollars in volume and approximately 45,000,000 linear feet in combined cleaning and assessments. She has worked directly with ALL clientele, and been directly involved in all contractual and administrative properties; including all financial dealings, project management, executing policies and procedures, field operations, staffing.

**Please see the attached job description and additional experience listed at the back of this section.*

Coastline Water Resources, Inc.
Job Description

COASTLINE
WATER RESOURCES, INC.

Job Title:	Operations Manager and Vice President		
Office Location:	7225 26th Street, Rio Linda, CA 95673		
Reporting to:	Jeremy Jaeger, CEO		
Employment Classification:	Officer/Management	**Exempt:** Y	**Non-Exempt:**

Definition:
The Vice President/Operations Manager is responsible for managing all superintendents & overseeing the management of all operators and laborers. It is also the Operations Managers duty to execute and oversee all internal operations, which includes work allocation, training, problem resolution, and a variety of clerical tasks. He or she evaluates performance and makes recommendations and establishes and implements short and long range organizational goals, objectives, policies, and operating procedures; by monitoring and evaluating program effectiveness, and implementing changes required for improvement. In the performance of this function, it is the Operations Manager's responsibility to interphase between project executives, field staff and the CEO, always protecting and promoting Coastline Water Resources interests. It is his or her responsibility to do whatever is reasonable necessary to discharge his or her duties which include, but are not necessarily limited to the following.

- Contract Management:
    - Responsible for preparing and executing project proposals, RFP's & bids and ordering all associated project bonds.
    - Support field crews in the development of new project policies & procedures, buy providing specifications, allowing them to allocate time to review specifications and implement procedures according to each project specification. Giving them the necessary resources to produce a superior product for our customers by setting up spreadsheets and logs for the use of individual projects.
    - Prior to the start of work on a new project, meet with Engineers and the field superintendent to develop and review plans & procedures.
    - Responsible for the Management of Contracts. Work with engineers and clientele to fulfill submittal requirements as per project specifications. Work with the Field Superintendent to ensure that progress updates and deadlines are being met. Review all project quantities and hours in order to execute monthly contract billings and work with engineers to resolve any billing issues or questions.
    - Work with Field Superintendent and Clientele to ensure that projects are coming in on time and on budget. If extra work is needed, work with both parties to make sure that extra work billings are submitted and approved.
    - Responsible for maintaining reports and overseeing for long term maintenance contracts which consist of collecting data from daily maintenance reports, maintaining daily logs and creating a yearly master report for the municipalities. Must also prepare on-call schedules and assure clientele swift response time for emergency work.
    - Develop and maintain strong interpersonal relationships, and communication with all involved in projects, and project a professional image. The Operations Manager should have outstanding people skills, both verbal and written. Work to achieve 100% client retention and work to negotiate contract extensions.

- To verify that each Subcontractor has completed his contractual requirements prior to the start of work at the jobsite. This includes making sure that Certificates of Insurance have been issued, contracts are fully executed. Also work with sub's to ensure that they are staying current on all payroll and progress payment submittals.
- To Travel to jobsites or client meetings, but mostly overseeing from the office.
- To oversee all forms of dispatching. Organize schedules with field superintendent for contract work, schedule out daily jobs for various other clientele with fleet supervisor, and handle the emergency dispatching program.
- To assist the CCTV staff and clientele in attaining mapping, asset files and coordinating submittals for Sacramento Area Sewer District.

- Payroll and Accounting & Recordkeeping:
  - To coordinate the retrieval of time cards, weekly safety meetings and BIT documents.
  - Review employee time cards and reconcile against jobs. Complete payroll reports, post paychecks, pay all garnishments and benefits.
  - Setup and maintain weekly reporting for payroll deductions, for employee garnishments, employee retirement funds, and health & dental benefits.
  - Complete weekly certified payroll reports for all necessary jobs and work with payroll officers to ensure that all records are compliant.
  - Maintain monthly and bi-weekly reports for worker's compensation payments, wage loss forms, and audits.
  - Hire and setup training procedures for new hires and certification renewals.
  - Responsible for creating & maintaining new hire packets for each employee which consists of I-9's, W-4's, DMV pull notice enrollment, BIT reporting, Drug Testing enrollment and screening, employee driving records, and standard Coastline new hire forms.
  - Review all insurance policies such as General Liability, Auto, Workers Compensation, Employee Health Insurance, and Employee Dental Insurance. Maintain payments and policy amendments, issue certificates of insurance, and review all policies for renewal.
  - Responsible for weekly billings of daily work tickets and the collection of all accounts receivable, filing of pre-liens on projects, posting invoices and depositing all accounts receivable.
  - Work with vendors and CEO to approve and post all accounts payables, which include all monthly reoccurring invoices as well as service and material invoices. Work with vendors to schedule payments and cut checks in a timely manner.
  - To review and maintain all monthly bank reconciliations for the following accounts: Coastline Water Resources; General Operating, Payroll, All Escrow Accounts, and American Express charges, along with the General Operating Accounts for Marques Jaeger Investment Corp., and Blake's Purpose.
  - Work with CEO and accountants to maintain financial reports such as chart of accounts, jobs, profit and loss statements and company balance sheets.
  - Organize and create all filing operations including the record keeping of employee files, truck and maintenance files, accounts payable and receivable, invoicing, job folders and bid information. At the beginning of each year create new files fro all accounts payable, accounts receivable, 401k filings, time cards and payroll records, as well as file all supplier W-9's, 1099 & 1096 forms and all employee W-2's and year end reports.
  - Maintain accounting processes and general office files for Marques Jaeger Investment Corp., and Blake's Purpose Charitable Foundation, Inc.

- General Office:
  - To have thorough and complete knowledge of all the processes put into place in both the office and the field. When necessary, revise old policies and implement new policies and operating procedures.

- To oversee equipment maintenance needs and approve associated repairs and scheduling of repair and maintenance work. If support staff is available to assist with maintenance, he or she may refer to support staff for help in scheduling.
- Work with fleet supervisor to ensure that equipment is being properly maintained and programs such as the BIT program is up to date and current. Work to keep BIT inspections current, track Daily Vehicle Inspection Reports and Drivers Logs.
- Prior to the start of work for any new employee, complete pre-employment drug screening and enrollment in the random drug testing program.
- To cooperate with all annual registrations and government filings, which include annual permits for all trucks, including disposal registrations for municipal contracts, Air Resources Board Registrations for emissions compliance, State Board of Equalization Filings, Statement of Information, and Annual Business Property Tax Statements.
- To maintain a current and valid notary license and all necessary bonds and insurance.
- To assure that a sufficient supply of all tags, documents & report forms, are at hand for Coastline crews record keeping.

Charge Accounts:

- Review all receipts and slips to ensure accurate billing. Save and organize all slips by date and reconcile monthly.

Safety Responsibilities:

- Assist the Field Superintendent in creating binders or necessary documentation for the safety program.

Skills Required:

- Vice President/Operations Manager must be able to effectively communicate with internal resources and clientele, and must be able to work under pressure and meet deadlines, while maintaining a positive attitude and providing exemplary service. He or she should be able to demonstrate tenacity and sense of urgency to ensure realistic and consistent outcomes, and provide strong leadership and support, while demonstrating the ability to attract, retain clients, peers and consistency to meet company objectives. Emphasizing the ability to demonstrate and multi-task, while operating in an interruptive driven environment and prioritize between competing issues, project needs, business needs, organizational issues, client relations and make judgments at a level consistent as a member of executive management. In addition, Operations Manager/Vice President must be able to use the following computer programs within a reasonable amount of time:
    - Microsoft Office Suite
    - Quickbooks Accounting
    - Dispatching Solutions

EMPLOYEE'S SIGNATURE: _____ **DATE:** _____

HIRING MANAGER: _____ **DOH:** _____

THE INTENT OF THIS JOB DESCRIPTION IS TO PROVIDE A REPRESENTATIVE SUMMARY OF THE MAJOR DUTIES AND RESPONSIBILITIES PERFOMED BY EMPLOYEES IN THIS POSITION. EMPLOYEES MAY BE REQUSTED TO PERFORM JOB –RELATED TASKS OTHER THAN THESE SPECIFICALLY PRESENTED IN THIS DESCRIPTION, AND WILL BE REQUIRED TO PERFORM ANY TASKS REQUESTED BY THE SUPERVISOR AND/OR BY THE MANAGEMENT.

APPROVED BY THE COMPANY PRESIDENT:

_____ **DATE:** _____

Chad Widener and Ryan Summers

Field Operations Managers

COASTLINE
WATER RESOURCES, INC.

Chad Widener
Sacramento Field Mgr
Employed Since 2004
NASSCO & PCAP Trained and Certified, 40 hr Supervisor Trained, Confined Space Entry Training, Competent Person Training, CPR, First Aid Training, MUTCD Traffic Control Flagging Certification

Ryan Summers
Bay Area Field Mgr
Employed Since 2016
NASSCO & PCAP Trained and Certified, CPR, First Aid Training, MUTCD Traffic Control Flagging Certification

Background:

Mr. Widener and Mr. Summers have been with Coastline Water Resources for a combined 18 years. Their job as Field Operations Manager is to assists supervisors by working with field personnel, operators, and laborers to provide accurate, timely and cost effective results by managing all projects in the region for both municipal and private clientele.

Both of these individuals were trained in the closed circuit pipeline inspection field and have worked with engineers, field staff, consultants, inspectors and a variety of other individuals to effectively manage projects as they relate to Cleaning Contracts, Condition Assessments, New Pipe Instillation, and Point Repairs. The purpose of this role is to contribute to the success of projects by working directly with the above mentioned individuals to assure that projects are completed successfully and on time. This role provides ongoing assistance during the course of ALL company projects that may include problem/dispute resolution, quality control/quality assurance, contract compliance and client satisfaction.

Chad Widener has been a part of the Coastline Water Resources ongoing Storm Drain Maintenance Project with the City of Citrus Heights since 2012 and the City of Rancho Cordova's Maintenance Program since 2014. Under this long-term agreement with both cities, Mr. Wideners role has increased in recent years from condition assessments and structural recommendations to the management of routine maintenance associated with these contracts, creek cleaning, and repairs. He has assisted management with the progression and tracking of operations, working with city staff to submit traffic control plans, working with residents and mitigating potential problems. In addition, Mr. Widener has managed numerous other projects for both private engineers and municipalities, both in construction and cleaning / inspection. Some of his other responsibilities aside from project and staff supervision include, being able to perform all field jobs pertaining to Coastline, coordinating job setup, assisting in dispatch, job safety, managing traffic control, assisting to achieve zero injury culture to maintain a safe, healthy, working environment, completing administrative organization and documentation, including project logs, equipment maintenance, safety meetings, records, files and reports pertaining to Field Operations.

Ryan Summers has been a part of the Coastline Water Resources ongoing Storm Drain Maintenance Project with the City of Citrus Heights and the City of Rancho Cordova's Maintenance Program since 2016. Under this long-term agreement with both cities, Ryan has helped to support his counterpart, Chad in necessary roles that require additional project management/supervision. Although Ryan's main territory is in the Bay Area, he has been around to assist on both of these contracts in the capacity of condition assessments and structural recommendations, as well as supervising and implementing traffic control, and working with inspectors, supervisors and residents to ensure that field operations are running smoothly. In addition, Mr. Summers has managed numerous other projects for both private engineers and municipalities, both in construction and cleaning / inspection. Currently his main objective is to run our Sanitary Sewer Condition Assessment Program down in San Jose where we have tv'd and cleaned over 3,000,000 Lf of Pipe. Some of his other responsibilities aside from project and staff supervision include, being able to perform all field jobs pertaining to Coastline, coordinating job setup, assisting in dispatch, job safety, managing traffic control, assisting to achieve zero injury culture to maintain a safe, healthy, working environment, completing administrative organization and documentation, including project logs, equipment maintenance, safety meetings, records, files and reports pertaining to Field Operations.

**Please see attached detailed job description for this position as well as additional firm experience listed in appendix 3*

Coastline Water Resources, Inc.
Job Description

COASTLINE
WATER RESOURCES, INC.

Job Title:	Sacramento Area Field Supervisor		
Office Location:	7225 26th Street, Rio Linda, CA 95673		
Reporting to:	Natalie Jelavich/Operations Manager & Vice President		
Employment Classification:	CCTV Operator/Supervisor	**Exempt:**	**Non-Exempt:** Y

Definition:
The Field Supervisor's responsibility is to operate & supervise the field safety and construction of a project and to complete the work on schedule, within the budget and to the quality of workmanship specified. In the performance of this function, it is the Field Supervisor's responsibility is to protect and promote Coastline Water Resources interests in all matters and to do whatever is reasonable necessary to discharge his duties and responsibilities which include, but are not necessarily limited to the following.

- To have thorough and complete knowledge and understanding of each Project Specification, Contract, Subcontract, Maps and Drawings, Addenenda, and to assist Clients and Engineers in the development of the on-site procedures.
- To examine project maps, drawings, specifications and addendas for design deficiencies or impractical details, and to bring those to the attention of the Project Engineer or Client prior to the commencement of work so that they can review them and make important decisions before our crews begin.
- To deliver updated mapping/markups to project engineers when field observations are not matching engineers drawings.
- Deliver look ahead schedules and necessary traffic control plans to the Engineers or Clients, prior to the commencement of work.
- To complete and deliver project schedules and project updates to the Engineers & Clients during the course of work either outlined in the project specifications or based upon a mutually agreed upon time.
- Prior to the start of work meet with Engineers and Clients to develop and review plans for Quality Control measures, review field safety and security practices, arrange for temporary utilities, obtain necessary permits, arrange disposal and/or staging areas, equipment and manpower.
- To coordinate, direct, monitor and inspect the field crews, subcontractors and suppliers to insure that all operations, labor and materials are meeting project specifications.
- To verify that each Subcontractor has completed his contractual requirements prior to the start of work at the jobsite and that safety programs are in place.
- To assure that a sufficient supply of all proper documents & report forms, CCTV camera equipment and materials, hydro-flush equipment and materials, jobsite supplies, safety supplies and other required incidentals are at hand for Coastline crews.
- To track and obtain water meters. Maintain a tracking sheet for each water meter that is taken out, report is usage to necessary agencies, and return all meters when work is complete.
- To perform all jobsite safety measures, including keeping a binder of all required safety & notices are at hand, manage field crews and insure that weekly toolbox/safety meetings are being completed.
- To cooperate with and direct when necessary, the activities of the municipalities and inspection agencies, and to put into effect remedial actions indicated by the reports of these agencies.
- To participate, as requires in the timely preparation of progress meetings with the owners, engineers and/or clients, and to see that all materials and submittals are reviewed and approved by the client representative.
- To maintain good relations and communications with all involved in the projects, including the public.
- To review all project quantities and hours for progress and final billings.
- Coordinate and handle the notification of residents, removal and disposal of debris and material, locate facilities (if needed per the specifications), manage traffic control and insure that plans are being followed.

- To handle all Traffic Control related issues; including working with engineers for approved TCP's, implementing approved traffic control measures on the jobsite, and working to coordinate Traffic Control Subcontractors when as needed.
- Work with residents to notify them and assure them that if access is needed into their homes that we will perform work in the least intrusive way possible. Should any damage or issues to their home arise as a result of the work Coastline performs, resolve those issues as quickly as possible, manage cleanup of their homes or properties to ensure full cleanup or restoration of damage areas was achieved.
- To maintain all project records associated with the field work, sub contractors and suppliers.
- To ensure that all CCTV data is getting backed up each week onto Coastline's internal server and secondary backup measures.
- To oversee equipment maintenance needs and approve associated repairs and scheduling of repair and maintenance work. If support staff is available to assist with maintenance, he or she may refer to support staff for help in scheduling.
- Review and approve extra work hours for field crews due to maintenance and or office work due to project data submittals and quality assurance.
- Perform CCTV Inspections as needed in the field if staffing is low.
- To track and manage all Sacramento Area reporting and submittals, along with other municipalities to ensure project acceptance.
- To manage and obtain uploads and downloads to the Sacramento County drive.

Charge Accounts:

- Review all receipts and slips to ensure accurate billing. Save and organize all slips by date and turn into the Operations Manager.

Safety Responsibilities:

- As noted above, Field Supervisor is responsibly for insuring that all subcontractors and Coastline operators/laborers enforces and performs their job duties & safety programs including the holding of a toolbox safety meetings. Make sure all employees on jobsites are wearing required safety attire, have necessary equipment, are conducting work in reference to OSHA regulations, and taking required meal and break periods.

Skills Required:

- Field Superintendent must be able to perform all jobsite tasks if needed, including the knowledge of operating equipment, reading blue prints and scheduling work accordingly, and having an understanding of project analysis. He or She must also be able to effectively communicate with internal resources and clientele, and must be able to coordinate all deliverables & work under pressure and meet deadlines, while maintaining a positive attitude and providing exemplary service. In addition, Field Supervisor must be able to use the following computer programs within a reasonable amount of time:
    - Microsoft Office Suite

Certificates & Licenses:

- The following is a list of certificates employee must keep current:
    - CPR & Confined Space certificate
    - 30 Hour OSHA Training
    - NASSCO Certification

EMPLOYEE'S SIGNATURE: _____ **DATE:** _____

HIRING MANAGER: _____ **DOH:** _____

THE INTENT OF THIS JOB DESCRIPTION IS TO PROVIDE A REPRESENTATIVE SUMMARY OF THE MAJOR DUTIES AND RESPONSIBILITIES PERFOMED BY EMPLOYEES IN THIS POSITION. EMPLOYEES MAY BE REQUSTED TO PERFORM JOB – RELATED TASKS OTHER THAN THESE SPECIFICALLY PRESENTED IN THIS DESCRIPTION, AND WILL BE REQUIRED TO PERFORM ANY TASKS REQUESTED BY THE SUPERVISOR AND/OR BY THE MANAGEMENT.

APPROVED BY THE COMPANY PRESIDENT:

_____ **DATE:** _____

Hydro-flush Operator

COASTLINE
WATER RESOURCES, INC.

Gerardo Barrera
Employed Since 2007
12 years related work experience.

Roberto Lopez
Employed Since 2004
15 years related work experience.

Jose Lopez
Employed Since 2008
11 years related work experience.

Espiridion Licea
Employed Since 2018
2 years related work experience.

Carlos Fuentes
Employed Since 2015
10 years related work experience

Tony Palmiere
Employed Since 2017
4 years related work experience

Ricardo Rodriguez
Employed Since 2006
13 years related work experience.

Anderew Wilkinson
Employed Since 2016
4 years related work

The Purpose of this role is to contribute to the success and profitability of projects by working with the Field Superintendent, Managers, Operators, Laborers and Clientele to provide project assistance using hydro-flush equipment to clean pipeline structures, culverts, drain inlets and execute hydro-excavation services. Responsibilities include maintaining and operating equipment, Job safety and project reporting. This role provides ongoing assistance during the course of company projects that may include, but are not limited to: Assessing pipe conditions and/or cleaning of Sewer and Storm Drain lines for Clientele, Accurately Reporting Conditions to Clientele and Necessary Agencies, Maintaining Equipment and Client Satisfaction.

Coastline Water Resources has cleaned over 30,000,000 linear feet of pipe for various clientele and municipalities, as well as cleaned miles of creeks and channels and completed hydro-excavation services on over 36,000 water meters installations for various municipalities. Over the course of 15 years our operators have cleaned lines using our Vaccon Hydro-flush trucks to ensure proper flow and service of structures. All of our operators have completed extensive and specialized training specific to operating this heavy equipment.

Each operator has worked with Coastline for an extensive period of time and has first hand knowledge in pipeline assessment and cleaning procedures relating to the terms of this proposal. All of our operators have worked with both the City of Rancho Cordova and the City of Citrus Heights since the inception of the Storm Drain Maintenance programs began in 2010 and 2014 and have a good understanding of what is to be expected under this type of work.

**Please see the attached detailed job description for this position*

Coastline Water Resources, Inc.
Job Description

COASTLINE
WATER RESOURCES, INC.

Job Title:	Hydro-flush Operator		
Office Location:	7225 26th Street, Rio Linda, CA 95673		
Reporting to:	Field Superintendent		
Employment Classification:	Operator	**Exempt:**	**Non-Exempt:** Y

Definition:
It is the Hydro-flush Operators responsibility to perform daily operational controls in the cleaning and monitoring of wastewater processes and/or hydro-excavation services, including, maintaining appropriate records and logs, and maintenance of equipment. All Hydro-flush Operators are expected to conduct work in an accurate, efficient and professional manner, and to adhere to the quality of workmanship specified. It is the Hydro-flush Operators responsibility to protect and promote Coastline Water Resources interests in all matters and to do whatever is reasonable necessary to discharge his duties and responsibilities which include, but are not necessarily limited to the following.

- To adhere to the policies set forth by the Field Supervisor or Client for each Project Specification, and to assist Field Supervisor in implementing the development of the on-site procedures.
- Respond to emergency calls for sewage and/or storm drain stoppage and cleanup of overflows as directed.
- To examine project maps and drawings and conduct cleaning work in an order that assists the Field Supervisors and related crews.
- Responsible for Operating and Maintaining the Hydro-flush Truck and related equipment. Notifying the Fleet Supervisor of potential breakdowns, supplies needed or worn equipment that needs repair, maintenance or replacing.
- Responsible for coordinating a list of equipment and supplies needed to the Fleet Supervisor, scheduling appropriate time for repairs with the Fleet Supervisor and/or support staff and coordinating any repairs that are not able to be made in house on our Hydro-flush truck with its suppliers, MME and related tractor repair shops.
- To coordinate with Fleet Supervisor and/or Field Supervisor disposal procedures, such as dumpsite locations, dumpster capacity, concerns regarding lining and/or ensuring a clean and secure disposal site.
- To record all cleaning observations, information and measurements into project specific Excel spreadsheets, logs or Daily Work Tickets (method of record keeping will depend on the project specifications).
- Sending any project specific excel reports via email to both Field Supervisor and Office Staff daily.
- Prior to the start of work meet with Field Supervisor to develop a project specific plan for reporting, cleaning measures and methods of work to be performed.
- To coordinate, direct and monitor the back up laborer to ensure that all Hydro-flush operations are running fluidly and efficiently.
- To perform all jobsite safety measures, including the performance of weekly toolbox safety meetings for your crew and turning records in each Monday.
- To cooperate with the activities of the municipalities and inspection agencies, and to put into effect remedial actions indicated by the reports of these agencies.

- To maintain good relations and communications with all involved in the projects, including the public.
- Provide all time cards and paperwork to the office each Monday for the prior week, which should include: Toolbox Safety Meetings, Daily Work Reports, and Extra Work Tags.
- To maintain a copy of all Hydro-flush Project Records.
- Responsible for Daily Truck Inspections, which include but are not limited to the observation of all truck lights, braking systems, tires, oil and fluid systems in both the tractor and vac-con components, filters, tools and nozzles.
- Responsible for the storage of water meters and related usage information/readings.

Safety Responsibilities:

- As noted above, the Hydro-flush Operator is responsible holding a weekly toolbox safety meeting and turning in all required documentation to the office each Monday. He or she is also responsible for Daily Truck Inspections and Log forms to insure that trucks and drivers are maintaining a safe working environment.
- To comply with company meal & break policies, referenced in the employee hire packets and on the back of time cards.

Skills Required:

- The Hydro-flush Operator must be able to perform all Hydro-flush tasks if needed, including the laborer position. He or she must be able to read blue prints and work according to the Field Supervisors schedule of work. He or She must also be able to effectively communicate with internal resources and clientele, and must be able to work under pressure and meet deadlines, while maintaining a positive attitude and providing exemplary service. In addition, the Hydro-flush Operator must be able to use the following computer programs within a reasonable amount of time:
    - Microsoft Office Suite

Special Physical Requirements:

- Must be able to lift manhole lids if needed, bend, sit and stand for periods of time.
- May be required to work in confined spaces (if confined space certification is current)

EMPLOYEE'S SIGNATURE: _____ **DATE:** _____

HIRING MANAGER: _____ **DOH:** _____

THE INTENT OF THIS JOB DESCRIPTION IS TO PROVIDE A REPRESENTATIVE SUMMARY OF THE MAJOR DUTIES AND RESPONSIBILITIES PERFOMED BY EMPLOYEES IN THIS POSITION. EMPLOYEES MAY BE REQUSTED TO PERFORM JOB –RELATED TASKS OTHER THAN THESE SPECIFICALLY PRESENTED IN THIS DESCRIPTION, AND WILL BE REQUIRED TO PERFORM ANY TASKS REQUESTED BY THE SUPERVISOR AND/OR BY THE MANAGEMENT.

APPROVED BY THE COMPANY VICE PRESIDENT:

_____ **DATE:** _____

CCTV Operator

COASTLINE
WATER RESOURCES, INC.

Nicholaus Helwig
Employed Since 2018
Extensive Training with Cues Equipment Granite XP and GNet software.
3 years related work experience.

Johnny Kirk
Employed Since 2005
NAASCO, PACP Trained and Certified, Extensive Training with Cues Equipment, Granite XP and GNet software.
16 years related work experience.

Nathan Mattila
Employed Since 2018
Extensive Training with Cues Equipment, Granite XP and GNet.
3 years related work experience.

Daniel Ramirez
Employed Since 2017
NAASCO, PACP Trained and Certified, Extensive Training with Cues Equipment Granite XP and GNet.
3 years related work experience.

Ryan Summers
Employed Since 2016
NAASCO, PACP Trained and Certified, Extensive Training with Cues Equipment, POSM, GNet and Granite XP software.
5 years related work experience.

Chad Widener
Employed Since 2004
NAASCO, PACP Trained and Certified, Extensive Training with Cues Equipment, POSM and Granite XP.
15 years related work experience.

The Purpose of this role is to contribute to the success and profitability of projects by working with the Field Superintendent, Managers, Operators, Laborers and Clientele to provide accurate assessments of pipeline. Responsibilities include maintaining and operating equipment, job safety and project reporting. This role provides ongoing assistance during the course of company projects that may include, but are not limited to: Assessing pipe conditions of Sewer and Storm Drain lines for Clientele, Accurately Reporting Conditions to Clientele and Necessary Agencies, Maintaining Equipment and Client Satisfaction.

Coastline Water Resources has televised over 15,000,000 linear feet of pipe for various clientele. Over the course of 15 years our operators have televised lines using both POSM, Granite XP, and GNet software, assisting in the assessment of pipeline structures, using perceptive judgment and decision-making skills to determine the structural integrity of pipe. Many of our operators are trained and certified in NASSCO/PACP, as well capable of televising for Sacramento Area Sewer District, who has some of the most stringent requirements in the region.

**Please see attached detailed job description for this position*

ATTACHMENT 2

Coastline Water Resources, Inc.
Job Description

COASTLINE
WATER RESOURCES, INC.

Job Title:	CCTV Operator		
Office Location:	7225 26th Street, Rio Linda, CA 95673		
Reporting to:	Field Superintendent		
Employment Classification:	Operator	**Exempt:**	**Non-Exempt:** Y

Definition:
The CCTV Operators responsibility is to operate, maintain and monitor all Closed Circuit TV Trucks and Equipment. It is the Operators responsibility to perform work and Pipeline Assessments in an accurate, efficient and professional manner, and to the quality of workmanship specified. To ensure integrity, accuracy and confidentiality of all information information gained. It is the CCTV Operators responsibility to protect and promote Coastline Water Resources interests in all matters and to do whatever is reasonable necessary to discharge his duties and responsibilities which include, but are not necessarily limited to the following.

- To have thorough and complete knowledge and understanding of each Project Specification, GIS Data/ Maps and Drawings, Addenenda, and to assist Field Supervisor in implementing the development of the on-site procedures.
- To examine project maps, drawings, specifications and addendas for design deficiencies or impractical specification details with the Field Supervisor in an Internal Pre-Construction meeting so that he can discuss them with the engineers and clients prior to the beginning of work.
- Perform all work in accordance to project standards and specifications, including but not limited to; code entry, NASSCO/PACP standards (if applicable), and various Municipality CCTV Specifications if not otherwise outlined in a project specific standard or specification.
- Responsible for Operating and Maintaining the CCTV Truck and related equipment. Notifying the Field Supervisor of potential breakdowns, supplies needed or worn equipment that needs repair, maintenance or replacing.
- Responsible for coordinating a list of equipment and supplies needed to the Field Supervisor, scheduling appropriate time for repairs with the Fleet Supervisor and coordinating any repairs that are not able to be made in house with our CCTV truck with its manufacturer Cues, Inc. and its related supplier.
- To perform all necessary software updates and changes needed to perform work.
- Building project databases per each project specification and or contract specification and performing weekly exports and data backup for those related projects.
- To record all events and assessments in a clear video format and providing all necessary reports and submittals for the related project in a format standard set by the project specifications.
- Responsible for maintaining a secure system for backing up all data to Coastline's internal server and secondary backup measures.
- Prior to the start of work meet with Field staff to develop a project specific plan for CCTV Reports & Quality Control measures and reporting.
- To coordinate, direct and monitor the back up laborer to ensure that all CCTV operations are running fluidly and efficiently.
- Prepare and complete all database entry in a CCTV spreadsheet per the contract and/or project specifications. This incudes data entry for the camera operations and defect locations.

- To perform all jobsite safety measures, including the performance of weekly toolbox safety meetings for your crew and turning all forms in each Monday.
- To cooperate with the activities of the municipalities and inspection agencies, and to put into effect remedial actions indicated by the reports of these agencies.
- To provide CCTV spreadsheets to the Field Supervisor, as required in a timely manner for the preparation of progress meetings with the owners, engineers and/or clients.
- To maintain good relations and communications with all involved in the projects, including the public.
- Provide all project quantities and hours to both the Field Supervisor and Operations Manager for progress and final billings.
- Provide all time cards and paperwork to the office each Monday for the prior week, which should include: Toolbox Safety Meetings, Daily Work Reports, and Extra Work Tags.
- To maintain all CCTV project records.

Safety Responsibilities:

- As noted above, the CCTV Operator is responsible holding a weekly toolbox safety meeting and turning in all required documentation to the office each Monday.
- To comply with company meal & break policies, referenced in the employee hire packets and on the back of time cards.

Skills Required:

- The CCTV Operator must be able to perform all CCTV Tasks if needed, including the laborer position. He or she must be able to read blue prints and work according to the Field Superintendents schedule of work. He or She must also be able to effectively communicate with internal resources and clientele, and must be able to work under pressure and meet deadlines, while maintaining a positive attitude and providing exemplary service. In addition, the CCTV Operator must be able to use the following computer programs within a reasonable amount of time:
    - Granite XP and/or GNet Software
    - Microsoft Office Suite

Certificates & Licenses:

- The following is a list of certificates employee must keep current:
    - NASSCO Certification

EMPLOYEE'S SIGNATURE: _____ **DATE:** _____

HIRING MANAGER: _____ **DOH:** _____

THE INTENT OF THIS JOB DESCRIPTION IS TO PROVIDE A REPRESENTATIVE SUMMARY OF THE MAJOR DUTIES AND RESPONSIBILITIES PERFOMED BY EMPLOYEES IN THIS POSITION. EMPLOYEES MAY BE REQUSTED TO PERFORM JOB --RELATED TASKS OTHER THAN THESE SPECIFICALLY PRESENTED IN THIS DESCRIPTION, AND WILL BE REQUIRED TO PERFORM ANY TASKS REQUESTED BY THE SUPERVISOR AND/OR BY THE MANAGEMENT.

APPROVED BY THE COMPANY VICE PRESIDENT:

_____ **DATE:** _____

Section G

Operations Plan

COASTLINE
WATER RESOURCES, INC.

Operations Plan

Coastline Water Resources was established in 2004 to assist contractors and municipalities in pipeline cleaning and assessment. Founded by Jeremy Jaeger, who was running his own underground pipeline company at the time, Jeremy realized that there was a strong need for a reliable and efficient CCTV Inspection and Pipeline cleaning company in the Sacramento area. Natalie Jelavich came on board in 2004 and assisted in the startup and operations of Coastline Water Resources; she has been with the company since its conception and serves as Operations Manager and Vice President of the company.
Our approach to serving customers is very simple; we strive to provide the best quality of customer service, coupled with state of the art equipment, and a full service staff who have excellent knowledge in the fields of Pipeline Assessment, Cleaning and Engineering/Construction.

How Will Coastline Improve your Operation Efficiency?

The staff at Coastline Water Resources has first hand knowledge as to what it takes to partner with a city and to implement plans, procedures, and policies, which will enable them to serve the citizens of Rancho Cordova in a safe and responsive manner. As the city's current Storm Drain Maintenance contractor we have demonstrated our ability to effectively manage this contract with excellent communication, scheduling, efficiency, and flexibility. We also hold the current contract for the City of Citrus Heights Storm Drain Maintenance program which is similar to this. Our goal, should we get this contract would be to continue building on our relationship with the City of Rancho Cordova personnel, working hand in hand to establish simple measures that would help The City of Rancho Cordova continue to stay on top of routine maintenance work, including but not limited to routine maintenance and emergency work on pipeline structures, as well as point repairs or other necessary work as it relates to drainage. We would work with city staff to continue to build upon a system that assures them that pipelines are getting cleaned routinely, as well as provide the city with an assessment to help staff stay on top of potential problems, and have up front knowledge of areas that may need more attention. We would look to continue to to minimize flooding and other issues that may come up during the rainy season.

Another area of importance to the city is our ability to respond to emergency's as they arise. With our headquarters in Rio Linda, we always have trucks that are in the area and ready to assist during severe weather and other emergency situations, such as collapsed pipes or sinkholes that may occur. Coastline's 24-hour emergency line insures that during any emergency there is always someone who can answer and assist in dispatching a truck out to a location. All of our hydro-flush operators are on an emergency call out schedule, which rotates weekly and can guarantee a response time of 90 minutes (or less), per the specifications laid out in this proposal.

The final area of expertise that we feel can be of benefit the city is our ability to provide pipeline repairs and construction. We have a full service pipeline company that is capable of completing any emergency repairs and or preventative work that needs to be done. We have a full lineup of small tools and equipment, as well as an extended staff of over 300 full time employees that specialize in both new construction and rehabilitation work.

What are our goals?

Long term, Coastline Water Resources' main goal would be to provide the city with exceptional service that will lead to a lasting partnership. In the short term, should we receive this contract, we would look to take care of issues and structures that the city may identify as hot ticket items. Coastline would also like to continue to work with the city to improve procedures that can be implemented on an annual basis to ensure that all systems are functioning well and reaching their fullest potential.

Potential items to address before the contract start date may include, but would not be limited to:

- Traffic Control procedures, plans and processing
- Emergency Response procedures – re-vist our protocol between city staff and Coastline
- Review Routine Maintenance Logs for pipeline assessments
- Record keeping: logging and maintaining assessments
- Job tracking
- Review our chart of communications between city personnel and Coastline staff
- Obtaining, insurance documents, permits for water meters and disposal agreements with SRCSD

Who Will I be Working With?

Our Operations Manager, Natalie Jelavich, manages all contracts and operations. Natalie would work closely with the city on scheduling, reporting, billing and implementing procedures and assuring that the work gets completed in a timely and professional manner. Both she and Jeremy Jaeger, President will work with key city management to ensure that quality service is provided.

Chad Widener is our field operations manager who would coordinate work onsite. Chad has a strong background in CCTV Inspections, Hydro-flush Cleaning and Pipeline Construction. Chad would work with city inspectors, project managers and Coastline personnel on all field coordination such as establishing and adhering to schedules, estimating project completion timelines, enforcing traffic control measures, ensuring a clean and orderly work site and environment, managing onsite staff, and any other site related procedures.

Jason Anderson is our chief estimator and coordinates all construction related activities. Jason would work with city staff to provide estimated schedules, equipment and pricing.

Jose Lopez is our fleet supervisor and he coordinates daily dispatch and scheduling. His job is to coordinate with our crews their daily dispatch and ensure that our fleet of trucks is in good working condition and operating in a safe manner.

In addition to the staff listed above, we have a full workforce of over 300 operators, laborers, foreman, project managers and support staff, all based out of our Sacramento location. These men and women are all fully skilled in their trade.

Expected Outcome

We anticipate if chosen as the city's exclusive Storm Drain Maintenance Contractor, that the city and Coastline will continue on with our successful working relationship. Based on our staffing, experience, and organization we expect that we would be able to assist the City of Rancho Cordova with <u>every</u> need in maintaining their Storm Drain systems.

Section H

Bid Bond

Document A310 TM – 2010

Conforms with The American Institute of Architects AIA Document 310

Bid Bond

CONTRACTOR:
(Name, legal status and address)

Coastline Water Resources, Inc.
7225 26th Street
Rio Linda, CA 95673

OWNER:
(Name, legal status and address)

City of Rancho Cordova
2729 Prospect Park Drive
Rancho Cordova, CA 95670

SURETY:
(Name, legal status and principal place of business)

The Guarantee Company of North America USA
1026 Oak Street, Ste. 200
Clayton, CA 94517
Mailing Address for Notices
1026 Oak Street, Ste. 200
Clayton, CA 94517

This document has important legal consequences. Consultation with an attorney is encouraged with respect to its completion or modification.

Any singular reference to Contractor, Surety, Owner or other party shall be considered plural where applicable.

BOND AMOUNT: 10% Ten Percent (10%) of the Total Amount Bid

PROJECT:
(Name, location or address, and Project number, if any)

Storm Drain Maintenance Services

The Contractor and Surety are bound to the Owner in the amount set forth above, for the payment of which the Contractor and Surety bind themselves, their heirs, executors, administrators, successors and assigns, jointly and severally, as provided herein. The conditions of this Bond are such that if the Owner accepts the bid of the Contractor within the time specified in the bid documents, or within such time period as may be agreed to by the Owner and Contractor, and the Contractor either (1) enters into a contract with the Owner in accordance with the terms of such bid, and gives such bond or bonds as may be specified in the bidding or Contract Documents, with a surety admitted in the jurisdiction of the Project and otherwise acceptable to the Owner, for the faithful performance of such Contract and for the prompt payment of labor and material furnished in the prosecution thereof; or (2) pays to the Owner the difference, not to exceed the amount of this Bond, between the amount specified in said bid and such larger amount for which the Owner may in good faith contract with another party to perform the work covered by said bid, then this obligation shall be null and void, otherwise to remain in full force and effect. The Surety hereby waives any notice of an agreement between the Owner and Contractor to extend the time in which the Owner may accept the bid. Waiver of notice by the Surety shall not apply to any extension exceeding sixty (60) days in the aggregate beyond the time for acceptance of bids specified in the bid documents, and the Owner and Contractor shall obtain the Surety's consent for an extension beyond sixty (60) days.

If this Bond is issued in connection with a subcontractor's bid to a Contractor, the term Contractor in this Bond shall be deemed to be Subcontractor and the term Owner shall be deemed to be Contractor.

When this Bond has been furnished to comply with a statutory or other legal requirement in the location of the Project, any provision in this Bond conflicting with said statutory or legal requirement shall be deemed deleted herefrom and provisions conforming to such statutory or other legal requirement shall be deemed incorporated herein. When so furnished, the intent is that this Bond shall be construed as a statutory bond and not as a common law bond.

Signed and sealed this 29th day of August, 2019.

Coastline Water Resources, Inc.
(Principal) *(Seal)*

(Witness)

By:
(Title)

The Guarantee Company of North America USA
(Surety) *(Seal)*

(Witness)

By:
(Title) K. Zerounian , Attorney-in-Fact

S-0054/AS 8/10

ACKNOWLEDGMENT

A notary public or other officer completing this certificate verifies only the identity of the individual who signed the document to which this certificate is attached, and not the truthfulness, accuracy, or validity of that document.

State of California
County of San Francisco)

On August 29, 2019 before me, Brittany Kavan, Notary Public
(insert name and title of the officer)

personally appeared K. Zerounian,
who proved to me on the basis of satisfactory evidence to be the person(s) whose name(s) is/are subscribed to the within instrument and acknowledged to me that he/she/they executed the same in his/her/their authorized capacity(ies), and that by his/her/their signature(s) on the instrument the person(s), or the entity upon behalf of which the person(s) acted, executed the instrument.

I certify under PENALTY OF PERJURY under the laws of the State of California that the foregoing paragraph is true and correct.

WITNESS my hand and official seal.

Signature Brittany Kavan (Seal)

HRE1 BRITTANY KAVAN
COMM. # 2176183
NOTARY PUBLIC - CALIFORNIA
SAN FRANCISCO COUNTY
My Comm. Exp. December 19, 2020 HRE1

ATTACHMENT 2

THE GUARANTEE®

The Guarantee Company of North America USA
Southfield, Michigan

POWER OF ATTORNEY

NOW ALL BY THESE PRESENTS: That **THE GUARANTEE COMPANY OF NORTH AMERICA USA**, a corporation organized and existing under the laws of the State of Michigan, having its principal office in Southfield, Michigan, does hereby constitute and appoint

Francis E. Cook, K. Zerounian, Betty L. Tolentino, Virginia L. Black, Gillian Bhaskaran, Kevin Re, T. Le, Brittany Kavan,
Julia Ortega, Susan M. Exline
Arthur J. Gallagher Risk Management Services, Inc.

Its true and lawful attorney(s)-in-fact to execute, seal and deliver for and on its behalf as surety, any and all bonds and undertakings, contracts of indemnity and other writings obligatory in the nature thereof, which are or may be allowed, required or permitted by law, statute, rule, regulation, contract or otherwise.

The execution of such instrument(s) in pursuance of these presents, shall be as binding upon **THE GUARANTEE COMPANY OF NORTH AMERICA USA** as fully and amply, to all intents and purposes, as if the same had been duly executed and acknowledged by its regularly elected officers at the principal office.

The Power of Attorney is executed and may be certified so, and may be revoked, pursuant to and by authority of Article IX, Section 9.03 of the By-Laws adopted by the Board of Directors of **THE GUARANTEE COMPANY OF NORTH AMERICA USA** at a meeting held on the 31st day of December, 2003. The President, or any Vice President, acting with any Secretary or Assistant Secretary, shall have power and authority:

1. To appoint Attorney(s)-in-fact, and to authorize them to execute on behalf of the Company, and attach the Seal of the Company thereto, bonds and undertakings, contracts of indemnity and other writings obligatory in the nature thereof; and
2. To revoke, at any time, any such Attorney-in-fact and revoke the authority given, except as provided below
3. In connection with obligations in favor of the Florida Department of Transportation only, it is agreed that the power and authority hereby given to the Attorney-in-Fact includes any and all consents for the release of retained percentages and/or final estimates on engineering and construction contracts required by the State of Florida Department of Transportation. It is fully understood that consenting to the State of Florida Department of Transportation making payment of the final estimate to the Contractor and/or its assignee, shall not relieve this surety company of any of its obligations under its bond.
4. In connection with obligations in favor of the Kentucky Department of Highways only, it is agreed that the power and authority hereby given to the Attorney-in-Fact cannot be modified or revoked unless prior written personal notice of such intent has been given to the Commissioner – Department of Highways of the Commonwealth of Kentucky at least thirty (30) days prior to the modification or revocation.

Further, this Power of Attorney is signed and sealed by facsimile pursuant to resolution of the Board of Directors of the Company adopted at a meeting duly called and held on the 6th day of December 2011, of which the following is a true excerpt:

RESOLVED that the signature of any authorized officer and the seal of the Company may be affixed by facsimile to any Power of Attorney or certification thereof authorizing the execution and delivery of any bond, undertaking, contracts of indemnity and other writings obligatory in the nature thereof, and such signature and seal when so used shall have the same force and effect as though manually affixed.

IN WITNESS WHEREOF, **THE GUARANTEE COMPANY OF NORTH AMERICA USA** has caused this instrument to be signed and its corporate seal to be affixed by its authorized officer, this 1st day of March, 2018.

THE GUARANTEE COMPANY OF NORTH AMERICA USA

Stephen C. Ruschak, President & Chief Operating Officer | **Randall Musselman, Secretary**

STATE OF MICHIGAN
County of Oakland

On this 1st day of March, 2018 before me came the individuals who executed the preceding instrument, to me personally known, and being by me duly sworn, said that each is the herein described and authorized officer of The Guarantee Company of North America USA; that the seal affixed to said instrument is the Corporate Seal of said Company; that the Corporate Seal and each signature were duly affixed by order of the Board of Directors of said Company.

Cynthia A. Takai
Notary Public, State of Michigan
County of Oakland
My Commission Expires February 27, 2024
Acting in Oakland County

IN WITNESS WHEREOF, I have hereunto set my hand at The Guarantee Company of North America USA offices the day and year above written.

Cynthia A. Takai

I, Randall Musselman, Secretary of **THE GUARANTEE COMPANY OF NORTH AMERICA USA**, do hereby certify that the above and foregoing is a true and correct copy of a Power of Attorney executed by **THE GUARANTEE COMPANY OF NORTH AMERICA USA**, which is still in full force and effect.

IN WITNESS WHEREOF, I have thereunto set my hand and attached the seal of said Company this 29th day of August, 2019

Randall Musselman, Secretary

CALIFORNIA ALL-PURPOSE ACKNOWLEDGMENT **CIVIL CODE § 1189**

A notary public or other officer completing this certificate verifies only the identity of the individual who signed the document to which this certificate is attached, and not the truthfulness, accuracy, or validity of that document.

State of California)
County of Sacramento)

On 09.05.19 before me, N. J. Day - notary public,
Date *Here Insert Name and Title of the Officer*

personally appeared Jeremy Jaeger
Name(s) of Signer(s)

,

who proved to me on the basis of satisfactory evidence to be the person(s) whose name(s) is/are subscribed to the within instrument and acknowledged to me that he/she/they executed the same in his/her/their authorized capacity(ies), and that by his/her/their signature(s) on the instrument the person(s), or the entity upon behalf of which the person(s) acted, executed the instrument.

I certify under PENALTY OF PERJURY under the laws of the State of California that the foregoing paragraph is true and correct.

WITNESS my hand and official seal.

N. J. DAY
Notary Public – California
Sacramento County
Commission # 2189434
My Comm. Expires Apr 15, 2021

Signature
Signature of Notary Public

Place Notary Seal Above

OPTIONAL

Though this section is optional, completing this information can deter alteration of the document or fraudulent reattachment of this form to an unintended document.

Description of Attached Document
Title or Type of Document: Bid Bond
Document Date: Number of Pages:
Signer(s) Other Than Named Above:

Capacity(ies) Claimed by Signer(s)

Signer's Name:
☐ Corporate Officer — Title(s):
☐ Partner — ☐ Limited ☐ General
☐ Individual ☐ Attorney in Fact
☐ Trustee ☐ Guardian or Conservator
☐ Other:
Signer Is Representing:

Signer's Name:
☐ Corporate Officer — Title(s):
☐ Partner — ☐ Limited ☐ General
☐ Individual ☐ Attorney in Fact
☐ Trustee ☐ Guardian or Conservator
☐ Other:
Signer Is Representing:

©2016 National Notary Association • www.NationalNotary.org • 1-800-US NOTARY (1-800-876-6827) Item #5907

Section I

Copies of Current Certificates of Insurance to the City

ATTACHMENT 2

ACORD®

CERTIFICATE OF LIABILITY INSURANCE

DATE (MM/DD/YYYY) 6/28/2019

THIS CERTIFICATE IS ISSUED AS A MATTER OF INFORMATION ONLY AND CONFERS NO RIGHTS UPON THE CERTIFICATE HOLDER. THIS CERTIFICATE DOES NOT AFFIRMATIVELY OR NEGATIVELY AMEND, EXTEND OR ALTER THE COVERAGE AFFORDED BY THE POLICIES BELOW. THIS CERTIFICATE OF INSURANCE DOES NOT CONSTITUTE A CONTRACT BETWEEN THE ISSUING INSURER(S), AUTHORIZED REPRESENTATIVE OR PRODUCER, AND THE CERTIFICATE HOLDER.

IMPORTANT: If the certificate holder is an ADDITIONAL INSURED, the policy(ies) must have ADDITIONAL INSURED provisions or be endorsed. If SUBROGATION IS WAIVED, subject to the terms and conditions of the policy, certain policies may require an endorsement. A statement on this certificate does not confer rights to the certificate holder in lieu of such endorsement(s).

PRODUCER
Arthur J. Gallagher & Co.
Insurance Brokers of CA, Inc. LIC #0726293
160 West Santa Clara Street, Suite 300
San Jose CA 95113

CONTACT NAME:
PHONE (A/C, No, Ext): 408-973-9500 FAX (A/C, No): 408-257-2985
E-MAIL ADDRESS:

INSURER(S) AFFORDING COVERAGE	NAIC #
INSURER A : The Travelers Indemnity Company of CT	25682
INSURER B : Travelers Property Casualty Co of America	25674
INSURER C : Indian Harbor Insurance Company	36940
INSURER D :	
INSURER E :	
INSURER F :	

INSURED COASWAT-03
Coastline Water Resources, Inc.
7225 26th Street
Rio Linda, CA 95673

COVERAGES CERTIFICATE NUMBER: 1001062565 REVISION NUMBER:

THIS IS TO CERTIFY THAT THE POLICIES OF INSURANCE LISTED BELOW HAVE BEEN ISSUED TO THE INSURED NAMED ABOVE FOR THE POLICY PERIOD INDICATED. NOTWITHSTANDING ANY REQUIREMENT, TERM OR CONDITION OF ANY CONTRACT OR OTHER DOCUMENT WITH RESPECT TO WHICH THIS CERTIFICATE MAY BE ISSUED OR MAY PERTAIN, THE INSURANCE AFFORDED BY THE POLICIES DESCRIBED HEREIN IS SUBJECT TO ALL THE TERMS, EXCLUSIONS AND CONDITIONS OF SUCH POLICIES. LIMITS SHOWN MAY HAVE BEEN REDUCED BY PAID CLAIMS.

INSR LTR	TYPE OF INSURANCE	ADDL INSD	SUBR WVD	POLICY NUMBER	POLICY EFF (MM/DD/YYYY)	POLICY EXP (MM/DD/YYYY)	LIMITS	
A	X COMMERCIAL GENERAL LIABILITY	Y	Y	DT22-CO-0L617139-TCT-19	7/1/2019	7/1/2020	EACH OCCURRENCE	$ 1,000,000
	CLAIMS-MADE X OCCUR						DAMAGE TO RENTED PREMISES (Ea occurrence)	$ 300,000
							MED EXP (Any one person)	$ 5,000
							PERSONAL & ADV INJURY	$ 1,000,000
	GEN'L AGGREGATE LIMIT APPLIES PER:						GENERAL AGGREGATE	$ 2,000,000
	POLICY X PRO-JECT LOC						PRODUCTS - COMP/OP AGG	$ 2,000,000
	OTHER:							$
B	AUTOMOBILE LIABILITY	Y	Y	BA-1N980612-19-26	7/1/2019	7/1/2020	COMBINED SINGLE LIMIT (Ea accident)	$ 1,000,000
	X ANY AUTO						BODILY INJURY (Per person)	$
	OWNED AUTOS ONLY / SCHEDULED AUTOS						BODILY INJURY (Per accident)	$
	X HIRED AUTOS ONLY / X NON-OWNED AUTOS ONLY						PROPERTY DAMAGE (Per accident)	$
								$
B	UMBRELLA LIAB X OCCUR			CUP-0L628928-19 -26	7/1/2019	7/1/2020	EACH OCCURRENCE	$ 5,000,000
	X EXCESS LIAB CLAIMS-MADE						AGGREGATE	$ 5,000,000
	DED X RETENTION $ 10,000							$
B	WORKERS COMPENSATION AND EMPLOYERS' LIABILITY		Y	UB- 0L625416-19- 26-G	7/1/2019	7/1/2020	X PER STATUTE / OTH-ER	
	ANYPROPRIETOR/PARTNER/EXECUTIVE OFFICER/MEMBER EXCLUDED? Y/N (Mandatory in NH)	N/A					E.L. EACH ACCIDENT	$ 1,000,000
	If yes, describe under DESCRIPTION OF OPERATIONS below						E.L. DISEASE - EA EMPLOYEE	$ 1,000,000
							E.L. DISEASE - POLICY LIMIT	$ 1,000,000
C	Contractors Pollution			PEC005230001	7/1/2019	7/1/2020	Limit Deductible	5,000,000 5,000

DESCRIPTION OF OPERATIONS / LOCATIONS / VEHICLES (ACORD 101, Additional Remarks Schedule, may be attached if more space is required)
RE: Annual Storm Drain Maintenance

Additional Insured (where required by written contract, per attached forms): The City of Rancho Cordova and its officers, officials, employees and volunteers.

Above insurance is primary and non-contributory.

CERTIFICATE HOLDER

City of Rancho Cordova
2729 Prospect Park Drive
Rancho Cordova CA 95670

CANCELLATION

SHOULD ANY OF THE ABOVE DESCRIBED POLICIES BE CANCELLED BEFORE THE EXPIRATION DATE THEREOF, NOTICE WILL BE DELIVERED IN ACCORDANCE WITH THE POLICY PROVISIONS.

AUTHORIZED REPRESENTATIVE

© 1988-2015 ACORD CORPORATION. All rights reserved.

ACORD 25 (2016/03) The ACORD name and logo are registered marks of ACORD

POLICY NUMBER: DT22-CO-0L617139-TCT-19 COMMERCIAL GENERAL LIABILITY

THIS ENDORSEMENT CHANGES THE POLICY. PLEASE READ IT CAREFULLY

BLANKET ADDITIONAL INSURED (CONTRACTORS)

This endorsement modifies insurance provided under the following:

COMMERCIAL GENERAL LIABILITY COVERAGE PART

1. WHO IS AN INSURED – (Section II) is amended to include any person or organization that you agree in a "written contract requiring insurance" to include as an additional insured on this Coverage Part, but:
   a) Only with respect to liability for "bodily injury", "property damage" or "personal injury"; and
   b) If, and only to the extent that, the injury or damage is caused by acts or omissions of you or your subcontractor in the performance of "your work" to which the "written contract requiring insurance" applies. The person or organization does not qualify as an additional insured with respect to the independent acts or omissions of such person or organization.
2. The insurance provided to the additional insured by this endorsement is limited as follows:
   a) In the event that the Limits of Insurance of this Coverage Part shown in the Declarations exceed the limits of liability required by the "written contract requiring insurance", the insurance provided to the additional insured shall be limited to the limits of liability required by that "written contract requiring insurance". This endorsement shall not increase the limits of insurance described in Section III – Limits Of Insurance.
   b) The insurance provided to the additional insured does not apply to "bodily injury", "property damage" or "personal injury" arising out of the rendering of, or failure to render, any professional architectural, engineering or surveying services, including:
      i. The preparing, approving, or failing to prepare or approve, maps, shop drawings, opinions, reports, surveys, field orders or change orders, or the preparing, approving, or failing to prepare or approve, drawings and specifications; and
      ii. Supervisory, inspection, architectural or engineering activities.
   c) The insurance provided to the additional insured does not apply to "bodily injury" or "property damage" caused by "your work" and included in the "products-completed operations hazard" unless the "written contract requiring insurance" specifically requires you to provide such coverage for that additional insured, and then the insurance provided to the additional insured applies only to such "bodily injury" or "property damage" that occurs before the end of the period of time for which the "written contract requiring insurance" requires you to provide such coverage or the end of the policy period, whichever is earlier.
3. The insurance provided to the additional insured by this endorsement is excess over any valid and collectible "other insurance", whether primary, excess, contingent or on any other basis, that is available to the additional insured for a loss we cover under this endorsement. However, if the "written contract requiring insurance" specifically requires that this insurance apply on a primary basis or a primary and non-contributory basis, this insurance is primary to "other insurance" available to the additional insured which covers that person or organization as a named insured for such loss, and we will not share with that "other insurance". But the insurance provided to the additional insured by this endorsement still is excess over any valid and collectible "other insurance", whether primary, excess, contingent or on any other basis, that is available to the additional insured when that person or organization is an additional insured under such "other insurance".
4. As a condition of coverage provided to the additional insured by this endorsement:
   a) The additional insured must give us written notice as soon as practicable of an "occurrence" or an offense which may result in a claim. To the extent possible, such notice should include:

© 2005 The St. Paul Travelers Companies, Inc.

i. How, when and where the "occurrence" or offense took place;

ii. The names and addresses of any injured persons and witnesses; and

iii. The nature and location of any injury or damage arising out of the "occurrence" or offense.

b) If a claim is made or "suit" is brought against the additional insured, the additional insured must:

i. Immediately record the specifics of the claim or "suit" and the date received; and

ii. Notify us as soon as practicable.

The additional insured must see to it that we receive written notice of the claim or "suit" as soon as practicable.

c) The additional insured must immediately send us copies of all legal papers received in connection with the claim or "suit", cooperate with us in the investigation or settlement of the claim or defense against the "suit", and otherwise comply with all policy conditions.

d) The additional insured must tender the defense and indemnity of any claim or "suit" to any provider of "other insurance" which would cover the additional insured for a loss we cover under this endorsement. However, this condition does not affect whether the insurance provided to the additional insured by this endorsement is primary to "other insurance" available to the additional insured which covers that person or organization as a named insured as described in paragraph **3.** above.

5. The following definition is added to SECTION V. – DEFINITIONS:

"Written contract requiring insurance" means that part of any written contract or agreement under which you are required to include a person or organization as an additional insured on this Coverage Part, provided that the "bodily injury" and "property damage" occurs and the "personal injury" is caused by an offense committed:

a. After the signing and execution of the contract or agreement by you;

b. While that part of the contract or agreement is in effect; and

c. Before the end of the policy period.

© 2005 The St. Paul Travelers Companies, Inc.

POLICY NUMBER: DT22-CO-0L617139-TCT-19

COMMERCIAL GENERAL LIABILITY

THIS ENDORSEMENT CHANGES THE POLICY. PLEASE READ IT CAREFULLY.

CONTRACTORS XTEND ENDORSEMENT

This endorsement modifies insurance provided under the following:

COMMERCIAL GENERAL LIABILITY COVERAGE PART

GENERAL DESCRIPTION OF COVERAGE – This endorsement broadens coverage. However, coverage for any injury, damage or medical expenses described in any of the provisions of this endorsement may be excluded or limited by another endorsement to this Coverage Part, and these coverage broadening provisions do not apply to the extent that coverage is excluded or limited by such an endorsement. The following listing is a general coverage description only. Limitations and exclusions may apply to these coverages. Read all the provisions of this endorsement and the rest of your policy carefully to determine rights, duties, and what is and is not covered.

A. Aircraft Chartered With Pilot

B. Damage To Premises Rented To You

C. Increased Supplementary Payments

D. Incidental Medical Malpractice

E. Who Is An Insured – Newly Acquired Or Formed Organizations

F. Who Is An Insured – Broadened Named Insured – Unnamed Subsidiaries

G. Blanket Additional Insured – Owners, Managers Or Lessors Of Premises

H. Blanket Additional Insured – Lessors Of Leased Equipment

I. Blanket Additional Insured – States Or Political Subdivisions – Permits

J. Knowledge And Notice Of Occurrence Or Offense

K. Unintentional Omission

L. Blanket Waiver Of Subrogation

M. Amended Bodily Injury Definition

N. Contractual Liability – Railroads

PROVISIONS

A. AIRCRAFT CHARTERED WITH PILOT

The following is added to Exclusion **g.**, **Aircraft, Auto Or Watercraft,** in Paragraph **2.** of **SECTION I – COVERAGES – COVERAGE A BODILY INJURY AND PROPERTY DAMAGE LIABILITY**:

This exclusion does not apply to an aircraft that is:

(a) Chartered with a pilot to any insured;

(b) Not owned by any insured; and

(c) Not being used to carry any person or property for a charge.

B. DAMAGE TO PREMISES RENTED TO YOU

1. The first paragraph of the exceptions in Exclusion **j.**, **Damage To Property**, in Paragraph **2.** of **SECTION I – COVERAGES – COVERAGE A BODILY INJURY AND PROPERTY DAMAGE LIABILITY** is deleted.

2. The following replaces the last paragraph of Paragraph **2.**, **Exclusions**, of **SECTION I – COVERAGES – COVERAGE A. BODILY INJURY AND PROPERTY DAMAGE LIABILITY**:

Exclusions **c.** and **g.** through **n.** do not apply to "premises damage". Exclusion **f.(1)(a)** does not apply to "premises damage" caused by:

a. Fire;

b. Explosion;

c. Lightning;

d. Smoke resulting from such fire, explosion, or lightning; or

e. Water;

unless Exclusion **f.** of Section **I** – Coverage **A** – Bodily Injury And Property Damage Liability is replaced by another endorsement to this Coverage Part that has Exclusion – All Pollution Injury Or Damage or Total Pollution Exclusion in its title.

A separate limit of insurance applies to "premises damage" as described in Paragraph **6.** of **SECTION III – LIMITS OF INSURANCE**.

© 2011 The Travelers Indemnity Company. All rights reserved.

3. The following replaces Paragraph **6.** of **SECTION III – LIMITS OF INSURANCE**:

   Subject to **5.** above, the Damage To Premises Rented To You Limit is the most we will pay under Coverage **A** for damages because of "premises damage" to any one premises. The Damage To Premises Rented To You Limit will apply to all "property damage" proximately caused by the same "occurrence", whether such damage results from: fire; explosion; lightning; smoke resulting from such fire, explosion, or lightning; or water; or any combination of any of these causes.

   The Damage To Premises Rented To You Limit will be:

   a. The amount shown for the Damage To Premises Rented To You Limit on the Declarations of this Coverage Part; or

   b. $300,000 if no amount is shown for the Damage To Premises Rented To You Limit on the Declarations of this Coverage Part.

4. The following replaces Paragraph **a.** of the definition of "insured contract" in the **DEFINITIONS** Section:

   a. A contract for a lease of premises. However, that portion of the contract for a lease of premises that indemnifies any person or organization for "premises damage" is not an "insured contract";

5. The following is added to the **DEFINITIONS** Section:

   "Premises damage" means "property damage" to:

   a. Any premises while rented to you or temporarily occupied by you with permission of the owner; or

   b. The contents of any premises while such premises is rented to you, if you rent such premises for a period of seven or fewer consecutive days.

6. The following replaces Paragraph **4.b.(1)(b)** of **SECTION IV – COMMERCIAL GENERAL LIABILITY CONDITIONS**:

   (b) That is insurance for "premises damage"; or

7. Paragraph **4.b.(1)(c)** of **SECTION IV – COMMERCIAL GENERAL LIABILITY CONDITIONS** is deleted.

C. INCREASED SUPPLEMENTARY PAYMENTS

1. The following replaces Paragraph **1.b.** of **SUPPLEMENTARY PAYMENTS – COVERAGES A AND B** of **SECTION I – COVERAGE**:

   b. Up to $2,500 for the cost of bail bonds required because of accidents or traffic law violations arising out of the use of any vehicle to which the Bodily Injury Liability Coverage applies. We do not have to furnish these bonds.

2. The following replaces Paragraph **1.d.** of **SUPPLEMENTARY PAYMENTS – COVERAGES A AND B** of **SECTION I – COVERAGES**:

   d. All reasonable expenses incurred by the insured at our request to assist us in the investigation or defense of the claim or "suit", including actual loss of earnings up to $500 a day because of time off from work.

D. INCIDENTAL MEDICAL MALPRACTICE

1. The following is added to the definition of "occurrence" in the **DEFINITIONS** Section:

   "Occurrence" also means an act or omission committed in providing or failing to provide "incidental medical services", first aid or "Good Samaritan services" to a person.

2. The following is added to Paragraph **2.a.(1)** of **SECTION II – WHO IS AN INSURED**:

   Paragraph **(1)(d)** above does not apply to "bodily injury" arising out of providing or failing to provide:

   (i) "Incidental medical services" by any of your "employees" who is a nurse practitioner, registered nurse, licensed practical nurse, nurse assistant, emergency medical technician or paramedic; or

   (ii) First aid or "Good Samaritan services" by any of your "employees" or "volunteer workers", other than an employed or volunteer doctor. Any such "employees" or "volunteer workers" providing or failing to provide first aid or "Good Samaritan services" during their work hours for you will be deemed to be acting within the scope of their employment by you or performing duties related to the conduct of your business.

© 2011 The Travelers Indemnity Company. All rights reserved.

3. The following is added to Paragraph **5.** of **SECTION III – LIMITS OF INSURANCE**:

   For the purposes of determining the applicable Each Occurrence Limit, all related acts or omissions committed in providing or failing to provide "incidental medical services", first aid or "Good Samaritan services" to any one person will be deemed to be one "occurrence".

4. The following exclusion is added to Paragraph **2., Exclusions**, of **SECTION I – COVERAGES – COVERAGE A BODILY INJURY AND PROPERTY DAMAGE LIABILITY**:

   Sale Of Pharmaceuticals

   "Bodily injury" or "property damage" arising out of the willful violation of a penal statute or ordinance relating to the sale of pharmaceuticals committed by, or with the knowledge or consent of, the insured.

5. The following is added to the **DEFINITIONS** Section:

   "Incidental medical services" means:

   a. Medical, surgical, dental, laboratory, x-ray or nursing service or treatment, advice or instruction, or the related furnishing of food or beverages; or

   b. The furnishing or dispensing of drugs or medical, dental, or surgical supplies or appliances.

   "Good Samaritan services" means any emergency medical services for which no compensation is demanded or received.

6. The following is added to Paragraph **4.b., Excess Insurance**, of **SECTION IV – COMMERCIAL GENERAL LIABILITY CONDITIONS**:

   The insurance is excess over any valid and collectible other insurance available to the insured, whether primary, excess, contingent or on any other basis, that is available to any of your "employees" or "volunteer workers" for "bodily injury" that arises out of providing or failing to provide "incidental medical services", first aid or "Good Samaritan services" to any person to the extent not subject to Paragraph **2.a.(1)** of Section II – Who Is An Insured.

E. WHO IS AN INSURED – NEWLY ACQUIRED OR FORMED ORGANIZATIONS

The following replaces Paragraph **4.** of **SECTION II – WHO IS AN INSURED**:

4. Any organization you newly acquire or form, other than a partnership, joint venture or limited liability company, of which you are the sole owner or in which you maintain the majority ownership interest, will qualify as a Named Insured if there is no other insurance which provides similar coverage to that organization. However:

   a. Coverage under this provision is afforded only:

      (1) Until the 180th day after you acquire or form the organization or the end of the policy period, whichever is earlier, if you do not report such organization in writing to us within 180 days after you acquire or form it; or

      (2) Until the end of the policy period, when that date is later than 180 days after you acquire or form such organization, if you report such organization in writing to us within 180 days after you acquire or form it, and we agree in writing that it will continue to be a Named Insured until the end of the policy period;

   b. Coverage **A** does not apply to "bodily injury" or "property damage" that occurred before you acquired or formed the organization; and

   c. Coverage **B** does not apply to "personal injury" or "advertising injury" arising out of an offense committed before you acquired or formed the organization.

F. WHO IS AN INSURED – BROADENED NAMED INSURED – UNNAMED SUBSIDIARIES

The following is added to **SECTION II – WHO IS AN INSURED**:

Any of your subsidiaries, other than a partnership, joint venture or limited liability company, that is not shown as a Named Insured in the Declarations is a Named Insured if you maintain an ownership interest of more than 50% in such subsidiary on the first day of the policy period.

No such subsidiary is an insured for "bodily injury" or "property damage" that occurred, or "personal injury" or "advertising injury" caused by an offense committed after the date, if any, during the policy period, that you no longer maintain an ownership interest of more than 50% in such subsidiary.

© 2011 The Travelers Indemnity Company. All rights reserved.

G. BLANKET ADDITIONAL INSURED – OWNERS, MANAGERS OR LESSORS OF PREMISES

The following is added to **SECTION II – WHO IS AN INSURED**:

Any person or organization that is a premises owner, manager or lessor and that you have agreed in a written contract or agreement to include as an additional insured on this Coverage Part is an insured, but only with respect to liability for "bodily injury", "property damage", "personal injury" or "advertising injury" that:

a. Is "bodily injury" or "property damage" that occurs, or is "personal injury" or "advertising injury" caused by an offense that is committed, subsequent to the execution of that contract or agreement; and

b. Arises out of the ownership, maintenance or use of that part of any premises leased to you.

The insurance provided to such premises owner, manager or lessor is subject to the following provisions:

a. The limits of insurance provided to such premises owner, manager or lessor will be the minimum limits which you agreed to provide in the written contract or agreement, or the limits shown on the Declarations, whichever are less.

b. The insurance provided to such premises owner, manager or lessor does not apply to:

(1) Any "bodily injury" or "property damage" that occurs, or "personal injury" or "advertising injury" caused by an offense that is committed, after you cease to be a tenant in that premises; or

(2) Structural alterations, new construction or demolition operations performed by or on behalf of such premises owner, lessor or manager.

c. The insurance provided to such premises owner, manager or lessor is excess over any valid and collectible other insurance available to such premises owner, manager or lessor, whether primary, excess, contingent or on any other basis, unless you have agreed in the written contract or agreement that this insurance must be primary to, or non-contributory with, such other insurance, in which case this insurance will be primary to, and non-contributory with, such other insurance.

H. BLANKET ADDITIONAL INSURED – LESSORS OF LEASED EQUIPMENT

The following is added to **SECTION II – WHO IS AN INSURED**:

Any person or organization that is an equipment lessor and that you have agreed in a written contract or agreement to include as an insured on this Coverage Part is an insured, but only with respect to liability for "bodily injury", "property damage", "personal injury" or "advertising injury" that:

a. Is "bodily injury" or "property damage" that occurs, or is "personal injury" or "advertising injury" caused by an offense that is committed, subsequent to the execution of that contract or agreement; and

b. Is caused, in whole or in part, by your acts or omissions in the maintenance, operation or use of equipment leased to you by such equipment lessor.

The insurance provided to such equipment lessor is subject to the following provisions:

a. The limits of insurance provided to such equipment lessor will be the minimum limits which you agreed to provide in the written contract or agreement, or the limits shown on the Declarations, whichever are less.

b. The insurance provided to such equipment lessor does not apply to any "bodily injury" or "property damage" that occurs, or "personal injury" or "advertising injury" caused by an offense that is committed, after the equipment lease expires.

c. The insurance provided to such equipment lessor is excess over any valid and collectible other insurance available to such equipment lessor, whether primary, excess, contingent or on any other basis, unless you have agreed in the written contract or agreement that this insurance must be primary to, or non-contributory with, such other insurance, in which case this insurance will be primary to, and non-contributory with, such other insurance.

I. BLANKET ADDITIONAL INSURED – STATES OR POLITICAL SUBDIVISIONS – PERMITS

The following is added to **SECTION II – WHO IS AN INSURED**:

Any state or political subdivision that has issued a permit in connection with operations performed by you or on your behalf and that you are required

© 2011 The Travelers Indemnity Company. All rights reserved.

by any ordinance, law or building code to include as an additional insured on this Coverage Part is an insured, but only with respect to liability for "bodily injury", "property damage", "personal injury" or "advertising injury" arising out of such operations.

The insurance provided to such state or political subdivision does not apply to:

a. Any "bodily injury," "property damage," "personal injury" or "advertising injury" arising out of operations performed for that state or political subdivision; or

b. Any "bodily injury" or "property damage" included in the "products-completed operations hazard".

J. KNOWLEDGE AND NOTICE OF OCCURRENCE OR OFFENSE

The following is added to Paragraph **2.**, **Duties In The Event of Occurrence, Offense, Claim or Suit**, of **SECTION IV – COMMERCIAL GENERAL LIABILITY CONDITIONS**:

e. The following provisions apply to Paragraph **a.** above, but only for the purposes of the insurance provided under this Coverage Part to you or any insured listed in Paragraph **1.** or **2.** of Section **II** – Who Is An Insured:

(1) Notice to us of such "occurrence" or offense must be given as soon as practicable only after the "occurrence" or offense is known by you (if you are an individual), any of your partners or members who is an individual (if you are a partnership or joint venture), any of your managers who is an individual (if you are a limited liability company), any of your "executive officers" or directors (if you are an organization other than a partnership, joint venture or limited liability company) or any "employee" authorized by you to give notice of an "occurrence" or offense.

(2) If you are a partnership, joint venture or limited liability company, and none of your partners, joint venture members or managers are individuals, notice to us of such "occurrence" or offense must be given as soon as practicable only after the "occurrence" or offense is known by:

(a) Any individual who is:

(i) A partner or member of any partnership or joint venture;

(ii) A manager of any limited liability company; or

(iii) An executive officer or director of any other organization;

that is your partner, joint venture member or manager; or

(b) Any "employee" authorized by such partnership, joint venture, limited liability company or other organization to give notice of an "occurrence" or offense.

(3) Notice to us of such "occurrence" or of an offense will be deemed to be given as soon as practicable if it is given in good faith as soon as practicable to your workers' compensation insurer. This applies only if you subsequently give notice to us of the "occurrence" or offense as soon as practicable after any of the persons described in Paragraphs **e. (1)** or **(2)** above discovers that the "occurrence" or offense may result in sums to which the insurance provided under this Coverage Part may apply.

However, if this Coverage Part includes an endorsement that provides limited coverage for "bodily injury" or "property damage" or pollution costs arising out of a discharge, release or escape of "pollutants" which contains a requirement that the discharge, release or escape of "pollutants" must be reported to us within a specific number of days after its abrupt commencement, this Paragraph **e.** does not affect that requirement.

K. UNINTENTIONAL OMISSION

The following is added to Paragraph **6.**, **Representations**, of **SECTION IV – COMMERCIAL GENERAL LIABILITY CONDITIONS**:

The unintentional omission of, or unintentional error in, any information provided by you which we relied upon in issuing this policy will not prejudice your rights under this insurance. However, this provision does not affect our right to collect additional premium or to exercise our rights of cancellation or nonrenewal in accordance with applicable insurance laws or regulations.

L. BLANKET WAIVER OF SUBROGATION

The following is added to Paragraph **8.**, **Transfer Of Rights Of Recovery Against Others To Us**, of **SECTION IV – COMMERCIAL GENERAL LIABILITY CONDITIONS**:

© 2011 The Travelers Indemnity Company. All rights reserved.

If the insured has agreed in a contract or agreement to waive that insured's right of recovery against any person or organization, we waive our right of recovery against such person or organization, but only for payments we make because of:

a. "Bodily injury" or "property damage" that occurs; or

b. "Personal injury" or "advertising injury" caused by an offense that is committed;

subsequent to the execution of that contract or agreement.

M. AMENDED BODILY INJURY DEFINITION

The following replaces the definition of "bodily injury" in the **DEFINITIONS** Section:

3. "Bodily injury" means bodily injury, mental anguish, mental injury, shock, fright, disability, humiliation, sickness or disease sustained by a person, including death resulting from any of these at any time.

N. CONTRACTUAL LIABILITY – RAILROADS

1. The following replaces Paragraph **c.** of the definition of "insured contract" in the **DEFINITIONS** Section:

   c. Any easement or license agreement;

2. Paragraph **f.(1)** of the definition of "insured contract" in the **DEFINITIONS** Section is deleted.

© 2011 The Travelers Indemnity Company. All rights reserved.

POLICY NUMBER: BA-1N980612-19-26

COMMERCIAL AUTO

THIS ENDORSEMENT CHANGES THE POLICY. PLEASE READ IT CAREFULLY.

BLANKET ADDITIONAL INSURED – PRIMARY AND NON-CONTRIBUTORY WITH OTHER INSURANCE

This endorsement modifies insurance provided under the following:

BUSINESS AUTO COVERAGE FORM

PROVISIONS

1. The following is added to Paragraph **A.1.c., Who Is An Insured**, of **SECTION II – COVERED AUTOS LIABILITY COVERAGE**:

   This includes any person or organization who you are required under a written contract or agreement between you and that person or organization, that is signed by you before the "bodily injury" or "property damage" occurs and that is in effect during the policy period, to name as an additional insured for Covered Autos Liability Coverage, but only for damages to which this insurance applies and only to the extent of that person's or organization's liability for the conduct of another "insured".

2. The following is added to Paragraph **B.5., Other Insurance** of **SECTION IV – BUSINESS AUTO CONDITIONS**:

   Regardless of the provisions of paragraph a. and paragraph **d.** of this part **5. Other Insurance,** this insurance is primary to and non-contributory with applicable other insurance under which an additional insured person or organization is the first named insured when the written contract or agreement between you and that person or organization, that is signed by you before the "bodily injury" or "property damage" occurs and that is in effect during the policy period, requires this insurance to be primary and non-contributory.

© 2016 The Travelers Indemnity Company. All rights reserved.
Includes copyrighted material of Insurance Services Office, Inc. with its permission.

POLICY NUMBER: BA-1N980612-19-26

COMMERCIAL AUTO

THIS ENDORSEMENT CHANGES THE POLICY. PLEASE READ IT CAREFULLY.

BUSINESS AUTO EXTENSION ENDORSEMENT

This endorsement modifies insurance provided under the following:

BUSINESS AUTO COVERAGE FORM

With respect to coverage provided by this endorsement, the provisions of the Coverage Form apply unless modified by the endorsement.

GENERAL DESCRIPTION OF COVERAGE – This endorsement broadens coverage. However, coverage for any injury, damage or medical expenses described in any of the provisions of this endorsement may be excluded or limited by another endorsement to the Coverage Part, and these coverage broadening provisions do not apply to the extent that coverage is excluded or limited by such an endorsement. The following listing is a general coverage description only. Limitations and exclusions may apply to these coverages. Read all the provisions of this endorsement and the rest of your policy carefully to determine rights, duties, and what is and is not covered.

A. BROAD FORM NAMED INSURED

B. BLANKET ADDITIONAL INSURED

C. EMPLOYEE HIRED AUTO

D. EMPLOYEES AS INSURED

E. SUPPLEMENTARY PAYMENTS – INCREASED LIMITS

F. HIRED AUTO – LIMITED WORLDWIDE COVERAGE – INDEMNITY BASIS

G. WAIVER OF DEDUCTIBLE – GLASS

H. HIRED AUTO PHYSICAL DAMAGE – LOSS OF USE – INCREASED LIMIT

I. PHYSICAL DAMAGE – TRANSPORTATION EXPENSES – INCREASED LIMIT

J. PERSONAL EFFECTS

K. AIRBAGS

L. NOTICE AND KNOWLEDGE OF ACCIDENT OR LOSS

M. BLANKET WAIVER OF SUBROGATION

N. UNINTENTIONAL ERRORS OR OMISSIONS

PROVISIONS

A. BROAD FORM NAMED INSURED

The following is added to Paragraph **A.1., Who Is An Insured**, of **SECTION II – LIABILITY COVERAGE**:

Any organization you newly acquire or form during the policy period over which you maintain 50% or more ownership interest and that is not separately insured for Business Auto Coverage. Coverage under this provision is afforded only until the 180th day after you acquire or form the organization or the end of the policy period, whichever is earlier.

B. BLANKET ADDITIONAL INSURED

The following is added to Paragraph **c.** in **A.1., Who Is An Insured**, of **SECTION II – LIABILITY COVERAGE**:

Any person or organization who is required under a written contract or agreement between you and that person or organization, that is signed and executed by you before the "bodily injury" or "property damage" occurs and that is in effect during the policy period, to be named as an additional insured is an "insured" for Liability Coverage, but only for damages to which this insurance applies and only to the extent that person or organization qualifies as an "insured" under the Who Is An Insured provision contained in Section II.

C. EMPLOYEE HIRED AUTO

1. The following is added to Paragraph **A.1., Who Is An Insured**, of **SECTION II – LIABILITY COVERAGE**:

   An "employee" of yours is an "insured" while operating an "auto" hired or rented under a contract or agreement in that "employee's" name, with your permission, while performing duties related to the conduct of your business.

© 2010 The Travelers Indemnity Company
Includes copyrighted material of Insurance Services Office, Inc. with its permission.

2. The following replaces Paragraph **b.** in **B.5., Other Insurance**, of **SECTION IV – BUSINESS AUTO CONDITIONS**:

   b. For Hired Auto Physical Damage Coverage, the following are deemed to be covered "autos" you own:

   (1) Any covered "auto" you lease, hire, rent or borrow; and

   (2) Any covered "auto" hired or rented by your "employee" under a contract in that individual "employee's" name, with your permission, while performing duties related to the conduct of your business.

   However, any "auto" that is leased, hired, rented or borrowed with a driver is not a covered "auto".

D. EMPLOYEES AS INSURED

The following is added to Paragraph **A.1., Who Is An Insured**, of **SECTION II – LIABILITY COVERAGE**:

Any "employee" of yours is an "insured" while using a covered "auto" you don't own, hire or borrow in your business or your personal affairs.

E. SUPPLEMENTARY PAYMENTS – INCREASED LIMITS

1. The following replaces Paragraph **A.2.a.(2)**, of **SECTION II – LIABILITY COVERAGE**:

   (2) Up to $3,000 for cost of bail bonds (including bonds for related traffic law violations) required because of an "accident" we cover. We do not have to furnish these bonds.

2. The following replaces Paragraph **A.2.a.(4)**, of **SECTION II – LIABILITY COVERAGE**:

   (4) All reasonable expenses incurred by the "insured" at our request, including actual loss of earnings up to $500 a day because of time off from work.

F. HIRED AUTO – LIMITED WORLDWIDE COVERAGE – INDEMNITY BASIS

The following replaces Subparagraph **(5)** in Paragraph **B.7., Policy Period, Coverage Territory**, of **SECTION IV – BUSINESS AUTO CONDITIONS**:

(5) Anywhere in the world, except any country or jurisdiction while any trade sanction, embargo, or similar regulation imposed by the United States of America applies to and prohibits the transaction of business with or within such country or jurisdiction, for Liability Coverage for any covered "auto" that you lease, hire, rent or borrow without a driver for a period of 30 days or less and that is not an "auto" you lease, hire, rent or borrow from any of your "employees", partners (if you are a partnership), members (if you are a limited liability company) or members of their households.

(a) With respect to any claim made or "suit" brought outside the United States of America, the territories and possessions of the United States of America, Puerto Rico and Canada:

(i) You must arrange to defend the "insured" against, and investigate or settle any such claim or "suit" and keep us advised of all proceedings and actions.

(ii) Neither you nor any other involved "insured" will make any settlement without our consent.

(iii) We may, at our discretion, participate in defending the "insured" against, or in the settlement of, any claim or "suit".

(iv) We will reimburse the "insured" for sums that the "insured" legally must pay as damages because of "bodily injury" or "property damage" to which this insurance applies, that the "insured" pays with our consent, but only up to the limit described in Paragraph **C.**, Limit Of Insurance, of SECTION **II** – LIABILITY COVERAGE.

(v) We will reimburse the "insured" for the reasonable expenses incurred with our consent for your investigation of such claims and your defense of the "insured" against any such "suit", but only up to and included within the limit described in Paragraph **C.**, Limit Of Insurance, of SECTION II – LIABILITY COVERAGE, and not in addition to such limit. Our duty to make such payments ends when we have used up the applicable limit of insurance in payments for damages, settlements or defense expenses.

(b) This insurance is excess over any valid and collectible other insurance available

© 2010 The Travelers Indemnity Company
Includes copyrighted material of Insurance Services Office, Inc. with its permission.

to the "insured" whether primary, excess contingent or on any other basis.

(c) This insurance is not a substitute for required or compulsory insurance in any country outside the United States, its territories and possessions, Puerto Rico and Canada.

You agree to maintain all required or compulsory insurance in any such country up to the minimum limits required by local law. Your failure to comply with compulsory insurance requirements will not invalidate the coverage afforded by this policy, but we will only be liable to the same extent we would have been liable had you complied with the compulsory insurance requirements.

(d) It is understood that we are not an admitted or authorized insurer outside the United States of America, its territories and possessions, Puerto Rico and Canada. We assume no responsibility for the furnishing of certificates of insurance, or for compliance in any way with the laws of other countries relating to insurance.

G. WAIVER OF DEDUCTIBLE – GLASS

The following is added to Paragraph **D., Deductible**, of **SECTION III – PHYSICAL DAMAGE COVERAGE**:

No deductible for a covered "auto" will apply to glass damage if the glass is repaired rather than replaced.

H. HIRED AUTO PHYSICAL DAMAGE – LOSS OF USE – INCREASED LIMIT

The following replaces the last sentence of Paragraph **A.4.b., Loss Of Use Expenses**, of **SECTION III – PHYSICAL DAMAGE COVERAGE**:

However, the most we will pay for any expenses for loss of use is $65 per day, to a maximum of $750 for any one "accident".

I. PHYSICAL DAMAGE – TRANSPORTATION EXPENSES – INCREASED LIMIT

The following replaces the first sentence in Paragraph **A.4.a., Transportation Expenses**, of **SECTION III – PHYSICAL DAMAGE COVERAGE**:

We will pay up to $50 per day to a maximum of $1,500 for temporary transportation expense incurred by you because of the total theft of a covered "auto" of the private passenger type.

J. PERSONAL EFFECTS

The following is added to Paragraph **A.4., Coverage Extensions**, of **SECTION III – PHYSICAL DAMAGE COVERAGE**:

Personal Effects

We will pay up to $400 for "loss" to wearing apparel and other personal effects which are:

(1) Owned by an "insured"; and

(2) In or on your covered "auto".

This coverage applies only in the event of a total theft of your covered "auto".

No deductibles apply to this Personal Effects coverage.

K. AIRBAGS

The following is added to Paragraph **B.3., Exclusions**, of **SECTION III – PHYSICAL DAMAGE COVERAGE**:

Exclusion **3.a.** does not apply to "loss" to one or more airbags in a covered "auto" you own that inflate due to a cause other than a cause of "loss" set forth in Paragraphs **A.1.b.** and **A.1.c.**, but only:

a. If that "auto" is a covered "auto" for Comprehensive Coverage under this policy;

b. The airbags are not covered under any warranty; and

c. The airbags were not intentionally inflated.

We will pay up to a maximum of $1,000 for any one "loss".

L. NOTICE AND KNOWLEDGE OF ACCIDENT OR LOSS

The following is added to Paragraph **A.2.a.**, of **SECTION IV – BUSINESS AUTO CONDITIONS**:

Your duty to give us or our authorized representative prompt notice of the "accident" or "loss" applies only when the "accident" or "loss" is known to:

(a) You (if you are an individual);

(b) A partner (if you are a partnership);

(c) A member (if you are a limited liability company);

(d) An executive officer, director or insurance manager (if you are a corporation or other organization); or

(e) Any "employee" authorized by you to give notice of the "accident" or "loss".

© 2010 The Travelers Indemnity Company
Includes copyrighted material of Insurance Services Office, Inc. with its permission.

M. BLANKET WAIVER OF SUBROGATION

The following replaces Paragraph **A.5., Transfer Of Rights Of Recovery Against Others To Us**, of **SECTION IV – BUSINESS AUTO CONDITIONS**:

5. Transfer Of Rights Of Recovery Against Others To Us

We waive any right of recovery we may have against any person or organization to the extent required of you by a written contract signed and executed prior to any "accident" or "loss", provided that the "accident" or "loss" arises out of operations contemplated by such contract. The waiver applies only to the person or organization designated in such contract.

N. UNINTENTIONAL ERRORS OR OMISSIONS

The following is added to Paragraph **B.2., Concealment, Misrepresentation, Or Fraud**, of **SECTION IV – BUSINESS AUTO CONDITIONS**:

The unintentional omission of, or unintentional error in, any information given by you shall not prejudice your rights under this insurance. However this provision does not affect our right to collect additional premium or exercise our right of cancellation or non-renewal.

© 2010 The Travelers Indemnity Company
Includes copyrighted material of Insurance Services Office, Inc. with its permission.

TRAVELERS

WORKERS COMPENSATION
AND
EMPLOYERS LIABILITY POLICY

ENDORSEMENT WC 99 03 76 (A) –

POLICY NUMBER: UB- 0L625416-19- 26-G

WAIVER OF OUR RIGHT TO RECOVER FROM OTHERS ENDORSEMENT – CALIFORNIA (BLANKET WAIVER)

We have the right to recover our payments from anyone liable for an injury covered by this policy. We will not enforce our right against the person or organization named in the Schedule.

The additional premium for this endorsement shall be % of the California workers' compensation premium.

Schedule

Person or Organization	Job Description
ANY PERSON OR ORGANIZATION FOR WHICH THE INSURED HAS AGREED BY WRITTEN CONTRACT EXECUTED PRIOR TO LOSS TO FURNISH THIS WAIVER	

This endorsement changes the policy to which it is attached and is effective on the date issued unless otherwise stated.

(The information below is required only when this endorsement is issued subsequent to preparation of the policy.)

Endorsement Effective 07/01/2019 Policy No. UB- 0L625416-19- 26-G Endorsement No.
Insured Premium

Insurance Company Countersigned by _____

DATE OF ISSUE: - - **ST ASSIGN:**

MEMORANDUM

DATE: October 7, 2019

TO: Honorable Mayor and Council Members

FROM: Kim Juran-Karageorgiou, Administrative Services Director and Rod Van Buskirk, Business Systems Analyst

SUBJECT: **A RESOLUTION AUTHORIZING THE CITY MANAGER TO EXECUTE AN AMENDMENT TO THE EXISTING CONTRACT FOR TYLER ENERGOV LAND MANAGEMENT AND PERMITTING SYSTEM; TOTAL CONTRACT WITH AMENDMENT IN AN AMOUNT NOT TO EXCEED $1,857,630**

RECOMMENDATION

Adopt the Resolution.

RESULT OF RECOMMENDED ACTION

Adoption of the Resolution will authorize the City Manager to amend our existing contract with Tyler Technologies EnerGov Land Management/Permitting System to include Tyler Cashiering, Tyler Content Manager, and allow for staff to roll out the new EnerGov system in two phases.

BACKGROUND

The City utilizes a land management and permitting software system for many functions across the City including planning, permitting, inspection, code enforcement, and licensing. The City implemented its existing land management and permitting software system in 2005. The City made the decision in 2017 to prioritize the acquisition and implementation of a new land management and permitting system to improve service delivery to the public and increase the efficiency of user departments. After a thorough evaluation and acquisition process, the City procured the EnerGov System from Tyler Technologies in 2018.

After assessing the scale and complexity of the implementation project and the demands on staff resources, it was determined that the City would be better served by separating the EnerGov project into two phases. Phase I, which is currently slated to go-live in February 2020, encompasses Business Licensing, Rental Housing Licensing, Animal Licensing, and Online Citizen Self-Service for Licensing. Phase II includes Permitting, Land Management, Planning, Inspection, and Code Enforcement and is anticipated to go-live in early 2021.

The City anticipates two key outcomes and benefits by separating the project into two project phases:

- *Timing and pace of software implementation matches City resource capacity.* The City's staff resources are focused on citizen/community service during a time of growth and expansion. It is essential that this focus remains the top priority and

that the EnerGov implementation be scaled back to a pace that aligns with this priority.

- *Time to learn and prepare.* As is true with every new software implementation, staff will learn from the new features of the system that work well and those that might require additional refining after go-live. By focusing the Phase I rollout on just licensing, staff will have additional time to learn and be better prepared for the more complex rollout of Phase II.

In addition to providing additional funds for the phased approach described above, the proposed contract amendment includes the procurement and implementation of additional software modules that will enhance the City's ability to more efficiently serve its citizens:

a. Tyler Cashiering which will enable an integrated solution with the City's Financial System and allow citizens to pay for licenses and permits with credit cards online;

b. Tyler Content Manager to improve the management and storage of all documentation associated with licenses, land management, plans, entitlements, permits, and code cases.

FISCAL IMPACT

The Amended Contract provides additional funds for both implementation and annual software subscription fees. The Amendment includes costs for additional software modules and costs for Phase I and Phase II Implementation Costs.

The updated software/services costs for this five-year contract are as follows:

	FY 2017/2018 (Actuals)	FY 2018/2019 (Actuals)	FY 2019/2020 (Forecast)	FY 2020/2021 (Forecast)	FY2021/2022 (Forecast)	TOTAL
Online Hosting Services	$ 198,396	$ 198,396	$ 227,026	$ 236,946	$ 237,362	$ 1,098,126
Implementation Services	$ 3,368	$ 144,894	$ 190,031	$ 380,775	$ -	$ 719,068
Travel Reimbursements	$ -	$ 8,436	$ 18,000	$ 14,000	$ -	$ 40,436
FISCAL YEAR TOTALS:	$ 201,764	$ 351,726	$ 435,057	$ 631,721	$ 237,362	$ 1,857,630

The City has sufficient funds budgeted for the implementation of this project in the IT Initiatives Capital Project. The ongoing maintenance costs will be budgeted in the City's operating budget on an ongoing basis.

ATTACHMENTS

1. Resolution
2. Exhibit A to the Resolution – Contract Amendment

ATTACHMENT 1

CITY OF RANCHO CORDOVA

RESOLUTION NO. XX-2019

A RESOLUTION OF THE CITY COUNCIL OF THE CITY OF RANCHO CORDOVA, STATE OF CALIFORNIA, AUTHORIZING THE CITY MANAGER TO EXECUTE AN AMENDMENT TO THE CONTRACT FOR TYLER ENERGOV LAND MANAGEMENT AND PERMITTING SYSTEM IN AN AMOUNT NOT TO EXCEED $1,857,630

WHEREAS, the City utilizes a land management and permitting software system for many functions across the City including planning review, permitting, inspections, code enforcement, land management, and licensing; and

WHEREAS, it was decided in 2017 to prioritize the acquisition and implementation of a new land management and permitting system to improve service delivery to the public and increase the efficiency of user departments; and

WHEREAS, after a thorough evaluation and acquisition process, the City procured the EnerGov System from Tyler Technologies in 2018; and

WHEREAS, after assessing the scale and complexity of the implementation project and the demands on staff resources, it was determined that the City would be better served by separating the EnerGov project into two phases and procuring the Tyler Cashiering and Tyler Content Manager modules, resulting in a contract amendment; and

WHEREAS, the proposed amendment will exceed the maximum amount the City Manager has authorization to approve; and

WHEREAS, there are sufficient funds available to cover the costs of the proposed contract amendment.

NOW, THEREFORE, BE IT HEREBY RESOLVED THE CITY COUNCIL OF THE CITY OF RANCHO CORDOVA does authorize the City Manager to execute a Contract Amendment with Tyler Technologies EnerGov in an amount not to exceed $1,857,630 in a form substantially similar to that attached hereto as Exhibit A.

PASSED AND ADOPTED by the City Council of the City of Rancho Cordova on the 7th day of October, 2019 by the following vote:

AYES:

NOES:

ABSENT:

ABSTAIN:

_____
Robert J. McGarvey, Mayor

ATTACHMENT 1

ATTEST:

_____
Stacy Leitner, CMC
City Clerk

AMENDMENT

This amendment ("Amendment") is effective as of the date of signature of the last party to sign as indicated below ("Amendment Effective Date"), by and between Tyler Technologies, Inc. with offices at One Tyler Drive, Yarmouth, Maine 04096 ("Tyler") and the City of Rancho Cordova, with offices at 2729 Prospect Park Drive, Suite 117, Rancho Cordova, California 95670 ("Client").

WHEREAS, Tyler and the Client are parties to an agreement dated March 23, 2018 ("Agreement"); and

WHEREAS, Tyler and Client desire to amend the terms of the Agreement as provided herein.

NOW THEREFORE, in consideration of the mutual promises hereinafter contained, Tyler and the Client agree as follows:

1. The items set forth in sales quotations numbers 2019-72215 and 2018-55189, attached hereto as Exhibits 1 and 2 respectively, are hereby added to the Agreement as of the Amendment Effective Date.

2. Payment for the items added to the Agreement pursuant to this Amendment shall be as follows:
    a. The annual SaaS Fees payable under the Agreement shall be increased in the amount of $28,630, for the Tyler Software set forth in Exhibits 1 and 2. Year 1 SaaS fees for the Tyler Software set forth in Exhibits 1 and 2 shall be prorated for a term commencing on the Amendment Effective Date and ending concurrently with Client's current SaaS term under the Agreement. Thereafter, annual SaaS fees will be determined and remitted in accordance with the Agreement.
    b. Unless otherwise provided herein, services identified at Exhibits 1 and 2 and added to the Agreement pursuant to this Amendment (totaling $21,525), along with applicable expenses (estimated at $3,400), shall be invoiced as provided and/or incurred.

3. The parties have decided to separate the project into two project phases. Accordingly, Sections 8.1 and 8.2 of the Statement of Work, Exhibit E to the Agreement, are hereby deleted in their entirety and replaced with the following:

    8.1 Billable Hours and Expenses in Scope - Phase 1 (includes project work completed to-date)

    - Project Management Services = 400 resource hours
    - Professional Implementation Services = 771 resource hours
    - Fundamentals Training = 40 resource hours
    - Training and Production Support = 40 resource hours
    - Report Development Services = 160 resource hours
    - Data Conversion Services = 112 resource hours
        - Including up to 4 data transfers (passes) from the Legacy database to EnerGov

- Integration Services = 0 resource hours
- (Contingency as Directed by City) = 274 hours

8.2 Business Scope / Transactions and Automation – Phase 1

- 8 unique Business Transaction Types
- 2 Best Management Practice Transaction Types (BMP Template)
- 0 unique GeoRules are in scope for this Phase
- 5 Unique Automation Events (Intelligent Object - IO & Intelligent Automation Agent-IAA)

8.1 Billable Hours and Expenses in Scope - Phase 2 (shared service approach for scope in excess of 8.2 below)

- Project Management Services = 320 resource hours
- Professional Implementation Services = 990 resource hours
- System Administration Training and System Configuration Support = 80 resource hours Training and Production Support = 160 resource hours
- Report Development Services = 60 resource hours
- Data Conversion Services = 224 resource hours
  - Including up to 4 data transfers (passes) from the Legacy database to EnerGov
- Integration Services = 0 resource hours
- (Contingency as Directed by City) = 97 hours

8.2 Business Scope / Transactions and Automation – Phase 2

- 18 unique Business Transaction Types
- 20 Best Management Practice Transaction Types (BMP Template)
- 10 unique GeoRules
- 10 Unique Automation Events (Intelligent Object - IO & Intelligent Automation Agent – IAA)

4. For Client's internal business purposes *only*, the services set forth in the Investment Summary, as amended pursuant to executed change orders and this Amendment, may be reconciled between the two project phases as set forth in the spreadsheet attached hereto as Exhibit 3. For the avoidance of doubt, Exhibit 3 is not intended to generate any changes to the contracted service amounts or payment terms. In the event of a conflict between the provisions of Exhibit 3 and the Investment Summary, as amended, the terms of the latter shall control.

5. This Amendment shall be governed by and construed in accordance with the terms and conditions of the Agreement.

6. All other terms and conditions of the Agreement shall remain in full force and effect.

SIGNATURE PAGE FOLLOWS

IN WITNESS WHEREOF, the parties hereto have executed this Amendment as of the dates set forth below.

Tyler Technologies, Inc.	City of Rancho Cordova, CA
By:_____	By:_____
Name:_____	Name:_____
Title:_____	Title:_____
Date:_____	Date:_____

Exhibit 1
Investment Summary

The following Investment Summary details the software and services to be delivered by us to you under the Agreement. This Investment Summary is effective as of the Effective Date. Capitalized terms not otherwise defined will have the meaning assigned to such terms in the Agreement.

In the event a comment in the following sales quotation conflicts with a provision of this Amendment, the provision in this Amendment shall control.

REMAINDER OF PAGE INTENTIONALLY LEFT BLANK

Quoted By:	Chuck Newberry
Date:	4/21/2019
Quote Expiration:	10/18/2019
Quote Name:	City of Rancho Cordova-LGD-EG-TC
Quote Number:	2019-72215
Quote Description:	Tyler Cashiering

Sales Quotation For

City of Rancho Cordova
2729 Prospect Park Dr Ste 117
Rancho Cordova, CA 95670-6291
Phone +1 (916) 942-0222

EnerGov SaaS - Silver

Description	Monthly Fee	Users/Units	Annual Fee
Extensions:			
Tyler Cashiering	$892.00	Site License	$10,700.00
Sub-Total:			$10,700.00
Less Discount:			*$1,070.00*
TOTAL:			**$9,630.00**

EnerGov Professional Services

Description	Hours/Units	Unit Price	Extended Price	Year One Maintenance
Professional Implementation Services	10	$175.00	$1,750.00	$0.00
oject Management Services	3	$175.00	$525.00	$0.00
TOTAL:			**$2,275.00**	**$0.00**

Summary	One Time Fees	Recurring Fees
Total SaaS	$0.00	$9,630.00
Total Tyler Software	$0.00	$0.00
Total Tyler Services	$2,275.00	$0.00
Total 3rd Party Hardware, Software and Services	$0.00	$0.00
Summary Total	**$2,275.00**	**$9,630.00**
Year One Contract Total	**$11,905.00**	
Contract Total	**$11,905.00**	

Unless otherwise indicated in the contract or amendment thereto, pricing for optional items will be held for six (6) months from the Quote date or the Effective Date of the contract, whichever is later.

Customer Approval: _____ Date: _____

Print Name: _____ P.O. #: _____

All primary values quoted in US Dollars

Comments

EnerGov monthly fees are rounded, excluding cents.

EnerGov SaaS includes up to 500GB of storage. Should additional storage be needed it may be purchased as needed at an annual fee of $3,000 per TB.

Exhibit 2
Investment Summary

The following Investment Summary details the software and services to be delivered by us to you under the Agreement. This Investment Summary is effective as of the Effective Date. Capitalized terms not otherwise defined will have the meaning assigned to such terms in the Agreement.

In the event a comment in the following sales quotation conflicts with a provision of this Amendment, the provision in this Amendment shall control.

REMAINDER OF PAGE INTENTIONALLY LEFT BLANK

Quoted By:	Chuck Newberry
Date:	5/8/2019
Quote Expiration:	2/10/2019
Quote Name:	City of Rancho Cordova-LGD-EG-TCM
Quote Number:	2018-55189
Quote Description:	TCM Standard

Sales Quotation For

City of Rancho Cordova
2729 Prospect Park Dr Ste 117
Rancho Cordova, CA 95670-6291
Phone +1 (916) 942-0222

EnerGov SaaS - Basic

Description	Monthly Fee	Users/Units	Annual Fee
Core Software:			
Tyler Content Manager Standard Edition	$1,583.00	1	$19,000.00
TOTAL:			**$19,000.00**

EnerGov Professional Services

Description	Hours/Units	Unit Price	Extended Price	Year One Maintenance
Professional Implementation Services	50	$175.00	$8,750.00	$0.00
Project Management Services	20	$175.00	$3,500.00	$0.00
Training & Production Support Services	40	$175.00	$7,000.00	$0.00
TOTAL:			**$19,250.00**	**$0.00**

Summary	One Time Fees	Recurring Fees
Total SaaS	$0.00	$19,000.00
Total Tyler Software	$0.00	$0.00
Total Tyler Services	$19,250.00	$0.00
Total 3rd Party Hardware, Software and Services	$0.00	$0.00
Summary Total	**$19,250.00**	**$19,000.00**
Year One Contract Total	**$38,250.00**	
Contract Total	**$38,250.00**	
Estimated Travel Expenses	**$3,400.00**	

Unless otherwise indicated in the contract or amendment thereto, pricing for optional items will be held for six (6) months from the Quote date or the Effective Date of the contract, whichever is later.

Customer Approval: _____ Date: _____

Print Name: _____ P.O. #: _____

All primary values quoted in US Dollars

Comments

EnerGov monthly fees are rounded, excluding cents.

EnerGov SaaS includes up to 500GB of storage. Should additional storage be needed it may be purchased as needed at an annual fee of $3,000 per TB.

City of Rancho Cordova

ORIGINAL Investment Summary

Implementation Services

System Modules				
Service Category	**Hours**	**Rate**	**Implementation Fee**	**Notes / Assumptions**
EnerGov Project Management Services	495	$ 175.00	$ 86,625	
EnerGov Professional Implementation Services	1,609	$ 175.00	$ 281,575	**PLM**: Includes a shared serve approach with EnerGov personnel responsible for 18 unique transactions, 20 template transactions, 10 GeoRules, 10 intelligent objects **LRM**: Includes a shared service approach with EnerGov personnel responsible for 10 unique transactions, 5 template transactions, 5 GeoRules, 10 intelligent objects
EnerGov Data Conversion Services	80	$ 250.00	$ 20,000	Includes one consolidated data source
EnerGov Fundamentals Training	120	$ 175.00	$ 21,000	40 hours of fundamentals / 80 hours of system configuration training
EnerGov Onsite Training and Production Support Services	200	$ 175.00	$ 35,000	40 hours UAT / 120 hours of end user / 40 hours of prod support
EnerGov Report Development Services	220	$ 250.00	$ 55,000	200 hours of report writing development/assistance
	-	$ -	$ -	
Subtotal - System Modules	2,724		$ 499,200	

Other Modules				
Service Category	**# of items**	**Rate**	**Implementation Fee**	**Notes / Assumptions**
	-	$ -	$ -	
	-	$ -	$ -	
	-	$ -	$ -	
	-	$ -	$ -	
Subtotal - System Modules	-		$ -	
Total - Implemenation Services	2,724		$ 499,200	

City of Rancho Cordova

Investment Summary - AS AMENDED VIA CHANGE ORDERS AND AMENDMENT

Implementation Services

System Modules - Phase 1				
Service Category	**Hours**	**Rate**	**Implementation Fee**	**Notes / Assumptions**
EnerGov Project Management Services	400	$ 175.00	$ 70,000	
EnerGov Professional Implementation Services	771	$ 175.00	$ 134,925	**LRM**: Includes 8 unique transactions, 2 template transactions, 5 Intelligent Objects
EnerGov Data Conversion Services	112	$ 250.00	$ 28,000	Includes the Business License module from one consolidated data source
EnerGov Fundamentals Training	40	$ 175.00	$ 7,000	
EnerGov Training and Production Support Services	40	$ 175.00	$ 7,000	40 hours UAT and end user training
EnerGov Report Development Services	160	$ 250.00	$ 40,000	

	-	$ -	$ -	
Subtotal - Phase 1 System Modules	**1,523**		**$ 286,925**	

Other Modules - Phase 1				
Service Category	**Hours**	**Rate**	**Implementation Fee**	**Notes / Assumptions**
	-	$ -	$ -	
	-	$ -	$ -	
	-	$ -	$ -	
	-	$ -	$ -	
Subtotal - Phase 1 System Modules	**-**		**$ -**	
Total - Phase 1 Implemenation Services	**1,523**		**$ 286,925**	

System Modules - Phase 2				
Service Category	**Hours**	**Rate**	**Implementation Fee**	**Notes / Assumptions**
EnerGov Project Management Services	320	$ 175.00	$ 56,000	
EnerGov Professional Implementation Services	990	$ 175.00	$ 173,250	**PLM**: Includes a shared serve approach with EnerGov personnel responsible for 18 unique transactions, 20 template transactions, 10 GeoRules, 10 intelligent objects
EnerGov Data Conversion Services	224	$ 250.00	$ 56,000	Includes Code, Permitting, Planning and Inspections modules from one consolidated data source
EnerGov System Adminsitration Training	80	$ 175.00	$ 14,000	80 hours of system configuration training
EnerGov Onsite Training and Production Support Services	160	$ 175.00	$ 28,000	40 hours UAT / 120 hours of end user / 40 hours of prod support
EnerGov Report Development Services	60	$ 250.00	$ 15,000	
	-	$ -	$ -	
Subtotal - Phase 2 System Modules	**1,834**		**$ 342,250**	

Other Modules - Phase 2				
Service Category	**Hours**	**Rate**	**Implementation Fee**	**Notes / Assumptions**
Tyler Cashiering - Professional Implementation Services	10	$ 175.00	$ 1,750	
Tyler Cashiering - Project Management Services	3	$ 175.00	$ 525	
Tyler Content Manager - Implementation Services	50	$ 175.00	$ 8,750	
Tyler Content Manager - Project Management Services	20	$ 175.00	$ 3,500	
Tyler Content Manager - Training & Production Support Services	40	$ 175.00	$ 7,000	
Subtotal - Phase 2 System Modules	**123**		**$ 21,525**	
Total - Phase 2 Implemenation Services	**1,957**		**$ 363,775**	

Contingency (As Directed by City)				
Service Category	**Hours**	**Rate**	**Implementation Fee**	**Notes / Assumptions**
Phase 1 Implementation Services	274 (est.)	Blended*	$ 48,000	
Phase 2 Implementation Services	97 (est.)	Blended*	$ 17,000	
Total - Phase 1 and Phase 2 Contingency	**371 (est.)**		**$ 65,000**	

*Blended - $175/hour and $200/hour

MEMORANDUM

DATE: October 7, 2019

TO: Honorable Mayor and Council Members

FROM: Elizabeth Sparkman, Community Development Director and Jeanette Cervantes, Management Technician

SUBJECT: **A RESOLUTION CREATING SPECIAL TAX AREA ZONE 25 AND AN ORDINANCE ESTABLISHING A SPECIAL TAX FOR TRANSIT-RELATED SERVICES FOR THE BRADSHAW VILLAGE PROJECT**

RECOMMENDATION

Adopt the Resolution and introduce and waive the first reading of the Ordinance.

RESULT OF RECOMMENDED ACTION

Adoption of the Resolution and Ordinance will assist the City in meeting the costs of providing Transit-Related Services by creating a Special Tax Area Zone and establishing a Special Tax for Transit-Related Services for the Bradshaw Village project.

BACKGROUND

The City Council adopted Resolution No. 141-2005 on November 7, 2005, providing for a Special Tax for Transit-Related Services to be imposed upon new development within the City. Pursuant to that resolution, a property owner approves a Special Tax on the parcels within a subdivision or project. The City Council then adopts a Resolution creating a Zone that encompasses the subdivision or project and an ordinance establishing the Special Tax.

The City Council, on May 20, 2019, adopted a Resolution approving the Major Design Review construction of a 57 residential lot subdivision, known as the Bradshaw Village project. Bradshaw Village Parc, LLC is the current property owner of the approximately 5-acre site. The provision of funding to provide Transit-Related Services by approving a Special Tax was made a condition of approval for the design review.

This item will establish Tax area Zone 25, the boundaries of which will be contiguous to the boundaries of the Bradshaw Village project. In addition to creating the Special Tax, the Ordinance will also set the date for the Transit-Related Services Tax election, which will be held on November 20, 2019, at which time the ballot(s) will be tabulated by the City, and the results be declared at the City Council meeting on December 2, 2019.

FISCAL IMPACT

There is no fiscal impact to the City's General Fund.

ATTACHMENTS

1. Resolution
2. Annexation Map
3. Ordinance
4. Exhibit A to the Ordinance – Boundary Map
5. Exhibit B to the Ordinance – Property Land Use Category

ATTACHMENT 1

CITY OF RANCHO CORDOVA

RESOLUTION NO. XX-2019

A RESOLUTION OF THE CITY COUNCIL OF THE CITY OF RANCHO CORDOVA, STATE OF CALIFORNIA, CREATING SPECIAL TAX AREA ZONE 25 FOR THE BRADSHAW VILLAGE PROJECT

WHEREAS, it is the intention of the City Council to create Zone 25 within the City of Rancho Cordova Transit-Related Services Special Tax Area and authorize an election; and

WHEREAS, it is the intention of the City Council to adopt an ordinance establishing a Special Tax for Transit-Related Services within Zone 25; and

WHEREAS, the City recognizes the need for increased Transit-Related Services in Zone 25 and the difficulty of funding the current or increased level of Services with revenues now available; and

WHEREAS, it is the intention of the City Council to direct the City Clerk to conduct an election by mail ballot pursuant to Elections Code Section 4000 and to be held on the earliest date permitted by law; and

WHEREAS, the City Council approved the Major Design Review for construction of a 57 residential lot subdivision, known as the Bradshaw Village project. The provision of funding to provide Transit-Related Services was made a condition of approval for the project. Condition No. 15 of the Major Design Approval requires the property owner/applicant to participate in the provision of funding to provide Transit-Related Services for the project. This will be accomplished by the property owner(s) participation in the Transit-Related Services Special Tax Area.

WHEREAS, the Transit-Related Services Tax as inflated to Fiscal Year 2019-2020 is $73.86 per low density residential dwelling unit or low density residential dwelling unit equivalent, $59.09 per medium density residential dwelling unit or medium density residential dwelling unit equivalent, $44.32 per high density residential dwelling unit or high density residential dwelling unit equivalent, $1,893.77 per retail and service commercial acre, $1,627.87 per commercial mixed use or office acre, and $679.51 per light industrial acre, subject to an annual inflator formula based on the Consumer Price Index for the San Francisco-Oakland-San Jose Area, or six percent, whichever is less. Multi-family residential units on a single parcel shall be assessed on a proportionately equivalent basis (e.g., a two-unit attached housing structure, such as a duplex, would be deemed to consist of two residential parcels for purposes of the transportation Tax); and

WHEREAS, for the purposes of this Resolution, a “voter” entitled to vote on the creation of Zone 25 is a person who owns real property within Zone 25, as shown on the last equalized assessment role prepared by the Sacramento County Assessor’s Office, at the time that the City Council submits an ordinance authorizing the imposition of a Transit-Related Services Tax to the voters of Zone 25. At the time that the Council adopted this Resolution, there were zero (0) registered voters residing within Zone 25 and one property owner. Because the Transit-Related Services Special Tax will be imposed on property in Zone 25 and paid by the owner of the property, the Council finds that restricting the vote on the Transit-Related Services Special Tax

to property owners in Zone 25 is appropriate and consistent with the principles and requirements of California Constitution article XIIIC (Proposition 218).

NOW, THEREFORE, BE IT HEREBY RESOLVED THE CITY COUNCIL OF THE CITY OF RANCHO CORDOVA as follows:

1. That portion of the City of Rancho Cordova shown on the Map, Attachment 2 hereto is established as Zone 25 of the Rancho Cordova Transit-Related Services Special Tax Area.

2. That Ordinance, reviewed and approved by the City Council on the same date as the resolution, is to be presented for approval of the voter of Zone 25 by a mail ballot election, to be held on November 20, 2019. The ballot proposition shall read as follows:

   "Shall Ordinance No. XX-2019 of the City Council of the City of Rancho Cordova be approved so as to authorize a Special Tax on property located in Zone 25 of the Rancho Cordova Transit-Related Services Special Tax Area to maintain the present level of Transit-Related Services and provide additional funding for increased Transit-Related Services?"

3. The City Clerk is directed to take all steps necessary to conduct the election required by this order. Said election shall be conducted by mailed ballot pursuant to Elections Code Section 4000 and shall be held November 20, 2019.

PASSED AND ADOPTED by the City Council of the City of Rancho Cordova on the 7th day of October, 2019 by the following vote:

AYES:

NOES:

ABSENT:

ABSTAIN:

_____
Robert J. McGarvey, Mayor

ATTEST:

_____
Stacy Leitner, CMC
City Clerk

ATTACHMENT 2

CITY OF RANCHO CORDOVA
TRANSIT RELATED SERVICES SPECIAL TAX AREA
ANNEXATION 25
(BRADSHAW VILLAGE)

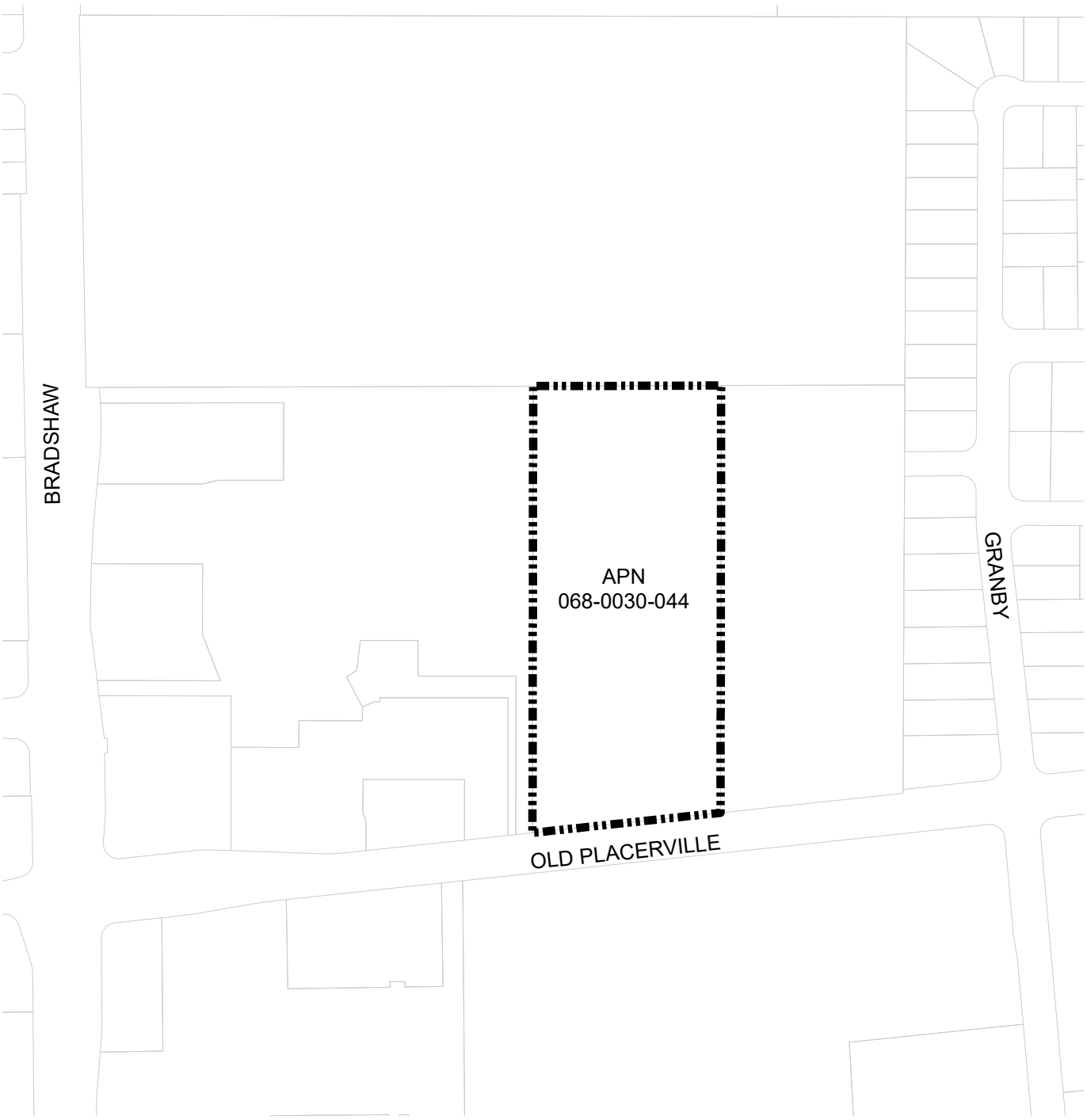

Legend

Annexation Boundary

Parcel Boundary

ATTACHMENT 3

CITY OF RANCHO CORDOVA

ORDINANCE NO. XX-2019

AN ORDINANCE OF THE CITY OF RANCHO CORDOVA, STATE OF CALIFORNIA, ESTABLISHING A SPECIAL TAX FOR TRANSIT-RELATED SERVICES FOR THE BRADSHAW VILLAGE PROJECT SUBJECT TO VOTER APPROVAL

THE CITY COUNCIL OF THE CITY OF THE RANCHO CORDOVA DOES ORDAIN AS FOLLOWS:

Section 1. Purpose, Intent and Authority.

It is of critical importance to the City Council of the City of Rancho Cordova that residents of and employees working in the City receive high quality Transit-Related Services. In carefully reviewing the City's budget and revenue projections, it is clear to City staff that the City budget does not contain adequate funding to ensure the continued delivery of adequate high-quality Transit-Related Services unless additional revenues are obtained.

It is the purpose and intent of this non-codified Ordinance to generate additional funds to pay for Transit-Related Services by authorizing the levy of a tax on improved parcels of real property on the secured property tax roll of Sacramento County that are within Zone 25 of the Rancho Cordova Transit-Related Services Special Tax Area (the "Zone").

This tax is a Special Tax within the meaning of Section 4 of the Article XIIIA of the California Constitution. Because the burden of this tax falls upon property, this tax also is a property tax, but this tax is not determined according to nor in any manner based upon the value of property; this tax is levied on a parcel and use of property basis. Insofar as not inconsistent with this Ordinance or with legislation authorizing Special Taxes and insofar as applicable to a property tax that is not based on value, such provisions of the California Revenue and Taxation Code and of Article XIII of the California Constitution as relate to ad valorem property taxes are intended to apply to the collection and administration of this tax (Section 4 of this Ordinance), as authorized by law. This tax is not an ad valorem property tax; it is an excise tax on the use of property. Because the revenue from the tax may be used only to fund Transit-Related Services, it is also a Special Tax.

The revenues raised by this tax are to be used solely for the purpose of providing Transit-Related Services as are deemed necessary by the City Council for the benefit of the residents and/or employees of Zone 25.

At the time that the Council adopted this non- codified Ordinance, there were zero (0) registered voters residing in Zone 25 and one (1) property owner. Because the Transit-Related Services Special Tax will be imposed on property in Zone 25 and paid by the owners of the property, the Council finds that restricting the vote on the Transit-Related Services Special Tax to property owners in Zone 25 is appropriate and consistent with the principles and requirements of California Constitution article XIIIC (Proposition 218).

Section 2. Definitions.

The following definitions shall apply throughout this Ordinance.

A. "Constant first year dollars" shall mean an actual dollar amount which, in years subsequent to the first fiscal year the tax is levied, shall have the same purchasing price as the base amount in first fiscal year dollars as measured by the Consumer Price Index. The base amount shall be the amount of tax per parcel as specified in Section 3(A) herein. The adjustments from actual to constant dollars shall be made by use of the Consumer Price Index, as specified in Section 3(B) herein.

B. "Consumer Price Index" means the Consumer Price Index for all Urban Consumers (CPI-U) for the San Francisco-Oakland-San Jose Area as published by the U.S. Department of Labor, Bureau of Labor Statistics. If the Consumer Price Index is discontinued or revised, such other government index or computation with which it is replaced shall be used in order to obtain substantially the same result as would be obtained if the Consumer Price Index had not been discontinued or revised.

C. “Fiscal year" means the period of July 1 through the following June 30.

D. “Parcel" means the land and any improvements thereon, designated by an assessor’s parcel map and parcel number and carried on the secured property tax roll of Sacramento County. For the purposes of this Ordinance, parcel does not include any land or improvements outside the boundaries of Zone 25, nor any land or improvements owned by any governmental entity.

E. “Rancho Cordova Transit-Related Services Special Tax Area" means all the properties within the jurisdictional limits of the City of Rancho Cordova.

F. “Rancho Cordova Transit-Related Services Special Tax Area Zone 25 (the “Zone”)” means that portion of the incorporated area of the City of Rancho Cordova located within the boundaries as shown on the map Exhibit A.

G. “Transit-Related Services” means providing, operating, maintaining and subsidizing transit Services and all supporting facilities, infrastructure, programs and incentives that benefit the residents of the Rancho Cordova Transit-Related Services Special Tax Area, and shall be calculated and set according to the methodology described in Engineer’s Report County Service Area No. 10 and Benefit Zone No. 1 County of Sacramento, September 7, 2004, which established the methodology for the original service charge for Benefit Zone No. 1.

H. “Voter” means a person who owns real property within Zone 25, as shown on the last equalized assessment role prepared by the Sacramento County Assessor’s Office, at the time that the City Council adopts an ordinance authorizing the imposition of a Transit-Related Services tax to the voters of Zone 25.

Section 3. Amount and Level of Taxes.

The tax per year on each parcel in the Zone shall not exceed the amount applicable to the parcel, as specified below.

A. For First Fiscal Year:

The tax per year for the first fiscal year (July 1, 2020 through June 30, 2021) shall be the amount of tax per Parcel for a Land Use Code Category as set forth on Exhibit B hereto. The use code assigned to each parcel shall be reviewed and updated periodically. Rates in Exhibit B shall be calculated and set according to the methodology described in Engineer's Report County Service Area No. 10 and Benefit Zone No. 1 County of Sacramento, September 7, 2004, which established the methodology for the original service charge for Benefit Zone No. 1.

B. For Subsequent Fiscal Years:

In order to keep the tax on each parcel in constant first year dollars for each fiscal year subsequent to the first fiscal year, the tax per year shall be adjusted as set forth below to reflect any increase in the Consumer Price Index beyond the first fiscal year the tax is levied.

In June or July of each year, City Council shall determine the amount of taxes to be levied upon the parcels in Zone 25 for the then current fiscal year, as set forth below.

For each Land Use Category on Exhibit B, the tax per year on each parcel for each fiscal year subsequent to the first fiscal year shall be an amount determined as follows:

Tax Per Parcel For then Current Fiscal Year	=	Tax Per Parcel For Immediately Preceding Fiscal Year	X	Consumer Price Index from April of immediately Preceding Fiscal Year to April of then Current Fiscal Year **OR** 6 percent, whichever is less

Provided, however, that in no event shall the tax per parcel for any fiscal year be less than the amount established for the first fiscal year.

C. Nature of Tax Levy.

The taxes levied on each parcel pursuant to this Article shall be a charge upon the parcel and shall be due and collectible as set forth in Section 4, below.

Section 4. Collection and Administration.

A. Taxes as Liens Against the Property.

The amount of taxes for each parcel each year shall constitute a lien on such property, in accordance with Revenue and Taxation Code Section 2187, and shall have the same effect as an ad valorem real property tax lien until fully paid.

B. Collection.

The taxes on each parcel shall be billed on the secured roll tax bills for ad valorem property taxes and are to be collected in the same manner in which Sacramento County collects secured roll ad valorem property taxes. Insofar as feasible and insofar as not inconsistent with this Ordinance, the times and procedures regarding exceptions, due dates,

installment payments, corrections, cancellations, refunds, late payments, penalties, liens, and collections for secured roll ad valorem property taxes (as established by Sacramento County) shall be applicable to the collection of this tax. Notwithstanding anything to the contrary in the foregoing, as to this tax:

1. The secured roll tax bills shall be the only notices required for this tax, and

2. The homeowners and veterans exemptions shall not be applicable because such exemptions are determined by dollar amount of value.

C. Costs of Administration by County.

The reasonable costs incurred by the County officers collecting and administering this tax shall be deducted from the collected taxes.

D. Use of Tax Revenue.

The revenue collected from the tax imposed by this ordinance shall be placed into a separate account and may be used only to fund Transit-Related Services, including the costs of administering and collecting the tax and enforcing the provisions of this ordinance. Revenue from the tax may be used for Transit-Related Services citywide.

E. Refunds.

1. Whenever the amount of any tax, interest or penalty has been overpaid or paid more than once or has been erroneously or illegally collected or received by the City pursuant to this ordinance, it may be refunded as provided in this Section.

2. No refund may be made except upon a written claim verified by the person who paid the tax or by his or her guardian or conservator or the executor or administrator of his or her will or estate and stating the grounds upon which the claim is made. All claims filed pursuant to this subsection must be presented within one year after payment of the amount for which the claimant is seeking a refund.

3. No order of a refund may be made until a written claim therefor has been presented in accordance with this subsection. No suit for money, damages or a refund may be brought against the City until a written claim therefor has been presented to the City and has been acted upon or has been deemed rejected by the City, in accordance with this subsection. Only the person who filed the claim may bring such a suit, and if another person should do so, judgment shall not be rendered for the plaintiff.

F. Initiatives to Affect Tax.

Consistent with the California Constitution (art. XIIIC, § 3) the tax imposed by this ordinance may be affected by initiative. The procedures for qualification of such an initiative and the election on a qualified initiative shall be consistent with the California Constitution (art. 2, sec. 8), the California Elections Code (Chapter 3 of Division 9), and the Municipal Code. The minimum number of signatures necessary to qualify an initiative to affect the tax approved by this ordinance shall be equal to 5 percent of the votes in the City for all

candidates for Governor at the last gubernatorial election. The election on a qualified initiative to affect the tax shall be a regular citywide election. An initiative affecting the tax shall be approved only if at least two-thirds of the votes cast on the measure are in favor of its approval.

Section 5. Severability Clause.

If any article, section, subsection, sentence, phrase of clause of this Ordinance is for any reason held to be invalid, such decision shall not affect the validity of the remaining portion of this Ordinance. The voters of Zone 25 hereby declare that they would have adopted the remainder of this Ordinance, including each article, section, subsection, sentenced phrase or clause, irrespective of the invalidity of any other article, section, subsection, sentence, phrase or clause.

Section 6. Effective Date and Posting.

This Ordinance shall take effect immediately upon its approval by two-thirds of the voters voting within the Zone in an election to be held on November 20, 2019 so that taxes shall first be collected hereunder for the tax year beginning July 1, 2020.

ADOPTED, THIS ___ day of October 2019 by the following vote:

AYES:

NOES:

ABSENT:

ABSTAIN:

_____
Robert J. McGarvey, Mayor

ATTEST:

_____
Stacy Leitner, CMC
City Clerk

Exhibit A to the Ordinance

CITY OF RANCHO CORDOVA
TRANSIT RELATED SERVICES SPECIAL TAX AREA
ANNEXATION 25
(BRADSHAW VILLAGE)

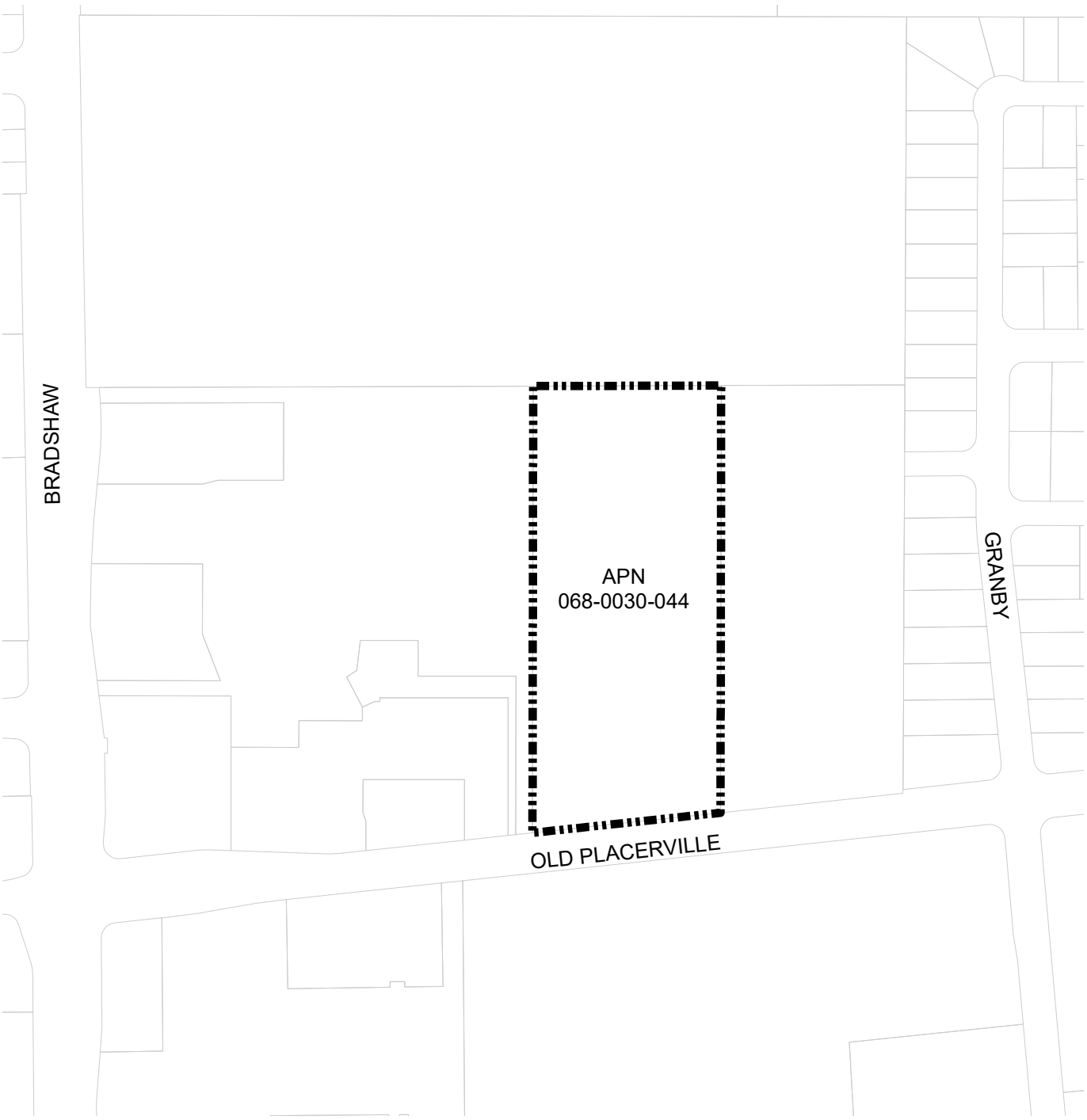

Legend

Annexation Boundary

Parcel Boundary

ATTACHMENT 5
Exhibit B to the Ordinance

Amount of Tax Per Parcel by Land Use Category

A. Residential Dwelling Units

As adjusted for inflation from the original base year, the amount of Tax per Parcel for fiscal year 2019-2020 for Residential Land Use Categories shall be $73.86 per low density residential dwelling unit or low density residential dwelling unit equivalent, $59.09 per medium density residential dwelling unit or medium density residential dwelling unit equivalent, or $44.32 per high density residential dwelling unit or high density residential dwelling unit equivalent (Multi-family residential units on a single parcel shall be assessed on a proportionately equivalent basis (e.g., a two-unit attached housing structure, such as a duplex, would be deemed to consist of two residential parcels for purposes of the Transit-Related Services Special Tax).

B. Non-Residential

As adjusted for inflation from the original base year, the amount of Tax per Parcel for fiscal year 2019-2020 for Non-Residential Land Use Categories (except Recreational and Agricultural) shall be $1,893.77 per retail and service commercial acre, $1,627.87 per commercial mixed use or office commercial acre, and $679.51 per light industrial acre.

C. Inflator Formula

The tax is subject to an annual inflator formula based on the Consumer Price Index for all Urban Consumers (CPI-U) for the San Francisco-Oakland-San Jose Area, or six percent, whichever is less.

MEMORANDUM

DATE: October 7, 2019

TO: Honorable Mayor and Council Members

FROM: Elizabeth Sparkman, Community Development Director and Jeanette Cervantes, Management Technician

SUBJECT: **A RESOLUTION DECLARING A PROTEST HEARING AND AUTHORIZING THE MAILING OF PROPERTY OWNER BALLOT RELATING TO THE IMPOSITION OF AN ANNUAL STORMWATER UTILITY FEE FOR THE BRADSHAW VILLAGE PROJECT**

RECOMMENDATION

Adopt the Resolution.

RESULT OF RECOMMENDED ACTION

Adoption of the Resolution will declare the results of the property owner protest and, if there exists less than a majority protest, authorize the mailing of a ballot to the property owner to approve the levy of the fee to pay for maintenance of storm drainage and flood protection systems for the project. The action also sets 1:30 p.m. on October 23, 2019 in the office of the City Clerk, as the time and date for the ballot tabulation for the matter.

BACKGROUND

The Bradshaw Village project has a condition of approval which requires funding for operation and maintenance of the storm drainage system. This condition will be satisfied by the participation in the new Stormwater Utility Fee for storm drainage and flood protection services which is the subject of tonight's action.

The property owner of the Bradshaw Village project has requested the City annex the project to the City's Stormwater Utility Fee pursuant to the California Health and Safety Code Section 5471 et seq. to provide the method of financing for storm drainage and flood protection services required to meet the condition.

On September 16, 2019, Council adopted a Resolution which established Procedures for the Conduct of a Protest Hearing and Balloting Relating to a Stormwater Utility Fee (the "Procedures") and designated October 7, 2019 at 5:30 p.m. as the time and place for hearing protests in connection with the annual Stormwater Utility Fee for the Bradshaw Village project.

DISCUSSION

The property owner has submitted a petition and waiver for the City to institute the proceedings to participate in the Stormwater Utility Fee. This annexation to the Stormwater Utility Fee will include the project generally known as the Bradshaw Village project, see Attachment 2. The maintenance services to be funded include the furnishing of services and materials for the ordinary and usual operation, maintenance, and servicing of the storm drain and flood protection systems.

Attachment 1 is the Resolution declaring the results of the property owner protest and authorizing the mailing of the property owner ballot, as required by Article XIII D of the California Constitution (also known as Proposition 218). The resolution sets forth the tabulation of ballots on October 23, 2019 at 1:30 p.m. in the office of the City Clerk. The results of the mailed ballot election will be presented to City Council at their regularly scheduled meeting November 4, 2019 and additional actions will be recommended based the ballot results.

A "Rate Analysis Report" was approved by City Council on September 4, 2014 by Resolution 103-2014 setting Fiscal Year 2014/2015 maximum annual Stormwater Utility Fee amount for each parcel proportionate to the estimated stormwater runoff for each parcel, see Attachment 3. The maximum annual fee will increase each subsequent Fiscal Year by the annual change in the Consumer Price Index (CPI), during the preceding year, for All Urban Consumers, for the San Francisco-Oakland-San Jose areas, published by the United States Department of Labor, Bureau of Labor Statistics.

A sample of the Stormwater Utility Fees for Fiscal Year 2019-2020 are summarized in the following table:

Table 1

Land Use Description	Total Area (acres)	Sample Fee
Single Family Residential (SFR1)	0.16	$131.64
Single Family Residential (SFR2)	0.22	$144.80
Single Family Residential (SFR3)	0.30	$154.69
Single Family Residential (SFR4)	0.40	$164.54
Single Family Residential (SFR5)	1.00	$164.54
Multi-Family Residential (MFR1)	5.00	$1,151.95
Commercial	1.00	$1,234.24
Industrial	1.00	$1,316.54
Schools	5.00	$822.83
Private Recreation	1.00	$411.40
Parks/Greenbelts	2.00	$164.54
Public Property (with structures)	2.00	$493.68

ATTACHMENTS

1. Resolution
2. Boundary Map
3. Rate Analysis Report

ATTACHMENT 1

CITY OF RANCHO CORDOVA

RESOLUTION NO. XX-2019

A RESOLUTION OF THE CITY COUNCIL OF THE CITY OF RANCHO CORDOVA, STATE OF CALIFORNIA, DECLARING THE RESULTS OF THE PROPERTY OWNER PROTEST AND AUTHORIZING THE MAILING OF A PROPERTY OWNER BALLOT RELATING TO THE IMPOSITION OF AN ANNUAL STORMWATER UTILITY FEE FOR THE BRADSHAW VILLAGE PROJECT

WHEREAS, this Council has received petitions and waivers from the owners of not less than 100% of the area of land proposed to be annexed into the Stormwater Utility Fee; and

WHEREAS, on September 27, 2019, the City Clerk caused a notice of the time and place of the hearing thereon and on the proposed annexation to the Stormwater Utility Fee to be published and such public hearing was opened on October 7, 2019; and

WHEREAS, the Council adopted Resolution 103-2014 approving a written report entitled, "Rate Analysis Report", dated September 4, 2014 (the "Written Report") prepared by Harris & Associates and filed with the City Clerk containing a description of each parcel of real property within the City to which the Stormwater Utility Fee is applicable (collectively, the "Identified Parcels") and the amount of the Stormwater Utility Fee for each such Identified Parcel for Fiscal Year 2014-15. The Written Report is on file in the office of the City Clerk and is available for public inspection; and

WHEREAS, this Council adopted a Resolution which established Procedures for the Conduct of a Protest Hearing and Balloting Relating to a Stormwater Utility Fee (the "Procedures") and set the date of public hearing; and

WHEREAS, this Council has conducted the public hearing and all interested persons have been afforded the opportunity to be heard, and the City Council has considered all protests against the annexation to the Stormwater Utility Fee; and

WHEREAS, there was no majority protest of the owner of the Identified Parcel subject to the Proposed Stormwater Utility Fee.

NOW, THEREFORE, BE IT HEREBY RESOLVED BY THE CITY COUNCIL OF THE CITY OF RANCHO CORDOVA:

1. The foregoing recitals are true and correct.

2. The City Clerk is hereby authorized and directed to mail a property owner ballot in accordance with law and the Procedures.

3. The date of the ballot tabulation shall be October 23, 2019 at 1:30 pm.

4. The date of the Council Meeting to report the results of the mailed ballot election shall be November 4, 2019 at 5:30 or as soon thereafter as the matter may be heard.

5. The City Council hereby designates Elizabeth Sparkman, Community Development Director, telephone number, (916) 851-8714 to answer inquiries regarding the ballot proceedings and procedural or technical matters.

PASSED AND ADOPTED by the City Council of the City of Rancho Cordova on the 7th day of October, 2019 by the following vote:

AYES:

NOES:

ABSENT:

ABSTAIN:

_____
Robert J. McGarvey, Mayor

ATTEST:

_____
Stacy Leitner, CMC
City Clerk

ATTACHMENT 2

CITY OF RANCHO CORDOVA
STORMWATER UTILITY FEE AREA
ANNEXATION 20
(BRADSHAW VILLAGE)

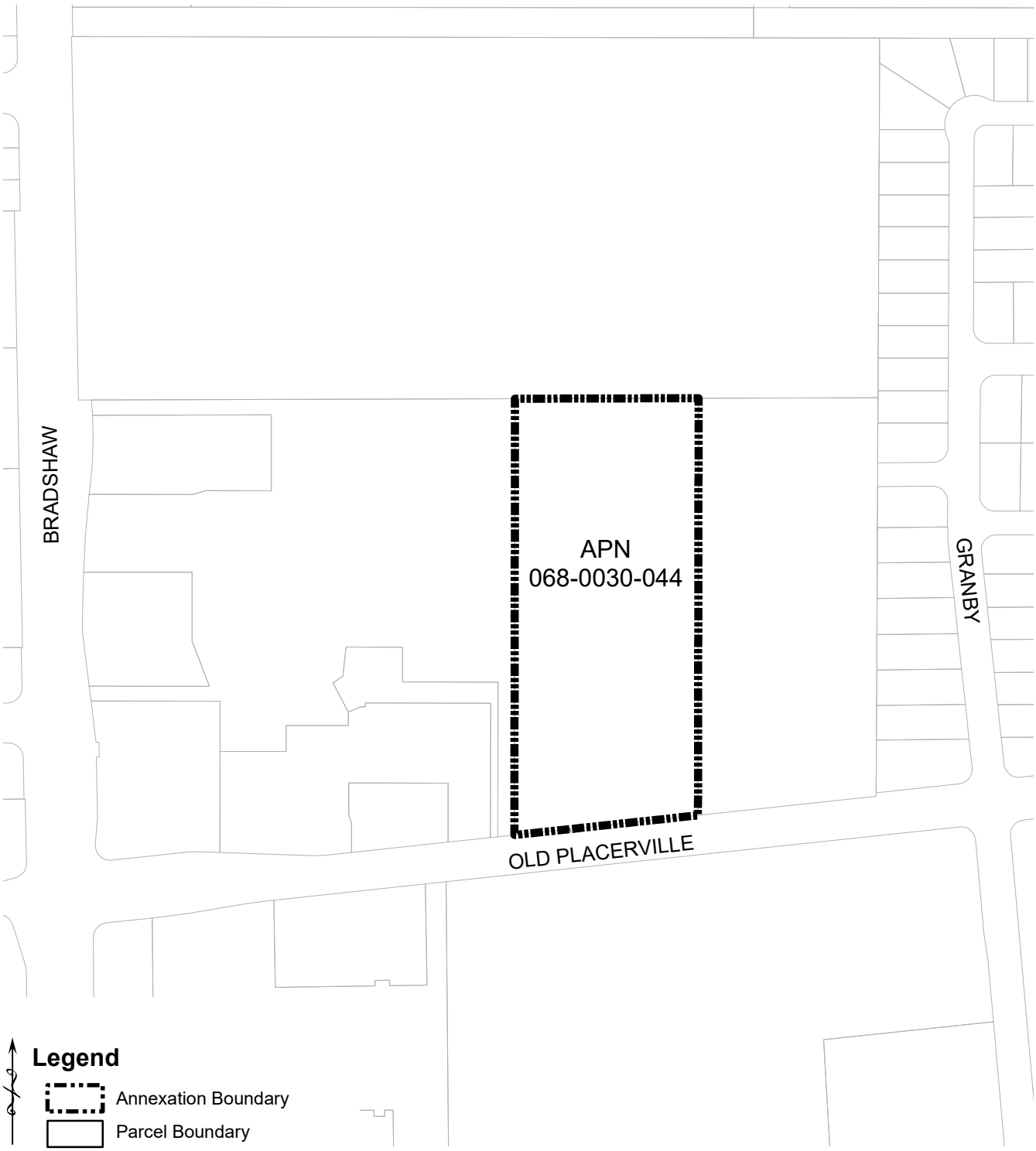

Harris & Associates℠

SHAPING THE FUTURE ONE PROJECT AT A TIME℠

Rate Analysis Report

for the

Stormwater Utility Fee

For the

City of Rancho Cordova

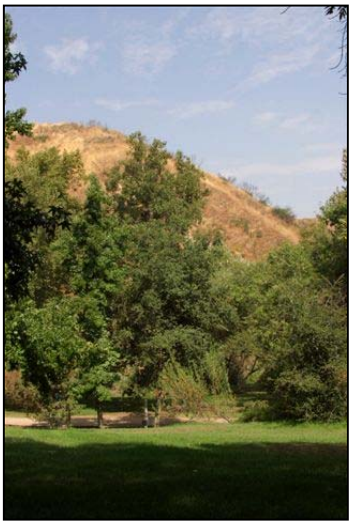

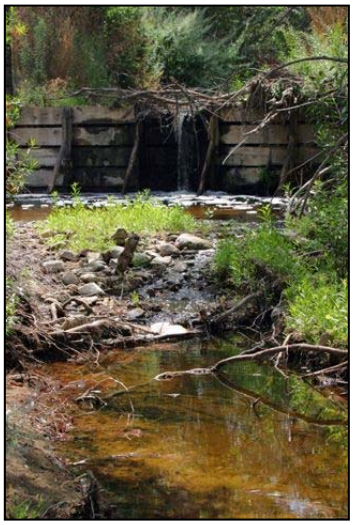

August 7, 2014

Introduction

The City of Rancho Cordova (City) is detaching from the County of Sacramento fee and is creating their own Stormwater Utility Fee, which is being levied per the California Health and Safety Code Section 5471 et seq.

The purpose of this Rate Analysis Report is to:

- Review the Stormwater Utility Fee and improvements to be funded.
- Review the requirements of Article XIIID of the State Constitution (Proposition 218) relating to requirements for apportioning the costs associated with the City's stormwater runoff system.
- Analyze and recommend an appropriate rate structure and provide estimated rates based on cost data information provided by the City.

Proposition 218 Requirements

This fee must comply with the provisions of Article XIIID of the California Constitution (Proposition 218). Section 6 of Proposition 218 has the following requirements for all "new, extended, imposed or increased" fees and charges:

1) "Revenues derived from the fee or charge shall not exceed the funds required to provide the property-related service."

2) "Revenues derived from the fee or charge shall not be used for any purpose other than that for which the fee or charge was imposed."

3) "The amount of a fee or charge imposed upon any parcel or person as an incident of property ownership shall not exceed the proportional cost of the service attributable to the parcel."

4) "No fee or charge may be imposed for a service unless that service is actually used by, or immediately available to, the owner of the property in question. Fees or charges based on potential or future use of service are not permitted. Standby charges, whether characterized as charges or assessments, shall be classified as assessments and shall not be imposed without compliance with [the assessment section of this code]."

5) "No fee or charge may be imposed for general governmental services including, but not limited to, police, fire, ambulance or library services where the service is available to the public at large in substantially the same manner as it is to property owners."

Background Information

In accordance with the Federal Clean Water Act of 1972, the United States Environmental Protection Agency (EPA) is required to establish regulations setting forth National Pollution Discharge Elimination System (NPDES) permit standards. The enactment of 1987 amendments to the Federal Clean Water Act (Act) of 1972 imposes permit requirements for discharge of storm waters. The Act allows the EPA to delegate its NPDES permitting authority to states with an approved environmental regulatory program. The State of California is one of the delegated states.

The responsibility for implementing various NPDES permits in the State of California has been delegated to the State Water Resources Control Board (SWRCB). The SWRCB administers NPDES authority through its nine Regional Boards. As an NPDES permittee, the City is required to manage stormwater pollution within its jurisdiction.

In order to provide for the safety of the residents of the City and protect property in the City from the damage associated with flooding and to meet the requirements of the NPDES permit, it is necessary to design, construct, operate, maintain, improve and replace storm drainage facilities which collect storm and surface water runoff and convey and treat such runoff in a safe manner to an acceptable point of discharge. It is also necessary to inspect, monitor, and take enforcement action related to illegal dumping, and illicit discharges. In order to properly fund such facilities and activities, the City has determined that it is necessary to impose on all developing properties in Rancho Cordova a user charge for storm drainage service.

Based on the 2030 General Plan and current specific plan areas, Rancho Cordova is expected to develop as shown in Table 1 below. The proposed boundary for the stormwater utility is shown in Appendix A.

Table 1 – Land Use

	Land Use/ Zoning Description	Total Acres	Total Units
Residential:			
LDR	SF (2.1-6.0 DU/AC)	2,635	13,156
	MD (6.1-12 DU/AC)	322	2,524
MDR	MD (6.1-18.0 DU/AC)	1,852	13,231
	MD (14.0-29.9 DU/AC)	60	885
HDR	HD (18.1-40.0 DU/AC)	192	4,372
	HD (30+ DU/AC)	30	825
	Residential Total	**5,090**	**34,993**
Non-Residential:			
VC	Village Commercial	202	
LTC	Local Town Center	134	
RTC	Regional Town Center	172	
BP	Business Park	158	
MP	Industrial Park	283	
Education:			
HS/MS	High School/Middle School	356	
MS	Middle School	20	
ES	Elementary School	102	
Open Space & Public:			
CP	Community Park	313	
P/QP	Public/Quasi Public	37	
NP	Neighborhood Park	194	
SWD	Storm Water Detention	186	
WP	Wetland Preserve	745	
DP	Drainage Parkway	270	
PR	Private Recreation	63	
OS	Open Space	168	
OS/P	Open Space/Preserve	279	
LC	Landscape Corridors	123	
GB	Green Belts	54	
ROW	Right-of-way	596	
BR/WP	Reservoir / Wetland Preserve	528	
S	Sewer Lift Station / Utility Substa	14	
	Vacant (unknown dev plan)	595	
	Total Non-residential	5,590	
	Total Residential & Non-Res	**10,680**	

A more detailed land use table by development area is shown in Appendix D.

This development is expected to require significant stormwater drainage and flood control facilities. Based on the development area and improvements that were required in four (4) recent developments

within the County of Sacramento, Table 2 summarizes the improvements that are expected once development is complete.

Table 2 – Expected Improvements

Infrastructure Type	Quantity	
Inlets	6,400	LF
Manholes	4,460	LF
66" Pipe	3,950	LF
60" Pipe	10,280	LF
54" Pipe	11,140	LF
48" Pipe	10,210	LF
42" Pipe	28,620	LF
36" Pipe	42,420	LF
30" Pipe	51,050	LF
27" Pipe	540	LF
24" Pipe	91,960	LF
21" Pipe	2,230	LF
18" Pipe	100,300	LF
15" Pipe	101,300	LF
12" Pipe	529,890	0
10" Pipe	4,170	0
Creeks and Channels	80	AC
Basins	320	AC

Services Funded

Expenditures from the revenue generated from the Stormwater Utility Fee are intended to comply with the requirements set forth in the NPDES permit. The activities and services funded by this fee include, but are not limited to:

1. Administration and oversight of the requirements set forth in the NPDES permit to City departments, developments, and local agencies.

2. Respond to and investigate incidents of illicit discharges and illegal connections to the storm drain system.

3. Periodically inspect facilities for proper handling of materials, chemicals, pollutants, garbage, waste, and debris and prevent any discharges to the storm drain system.

4. Regularly clean and maintain catch basins, the flowline, and storm drainage facilities.

5. Installation and maintenance of water quality devices required to keep pollutants out of the storm drain system.

6. Discourage illegal dumping or discharge of pollutants into the storm drain system by stenciling all City-owned catch basins with a "No Dumping" message.

7. Augment public education and outreach programs in regards to the proper use and function of the storm drainage system and the receiving waters.

8. Develop programs to promote, publicize, and facilitate public reporting of illicit discharges to the storm drain system.

9. Encourage the proper disposal of household hazardous waste (HHW) to prevent the improper disposal to the storm drain system or to the sewer system.

10. Discourage the improper disposal of litter, garden clippings, leaves, and pet waste into the street or the storm drain system.

11. Capital replacement of storm drainage and flood control improvements at the end of the expected useful life for such improvements.

Rate Structure Analysis

Section 6.b of Article XIIID of the State Constitution (Proposition 218) states that:

> "The amount of a fee or charge imposed upon any parcel or person as an incident of property ownership shall not exceed the proportional cost of the service attributable to the parcel."
>
> and
>
> "No fee or charge may be imposed for a service unless that service is actually used by, or immediately available to, the owner of the property in question."

By definition, all properties that shed stormwater into the City's stormwater drainage system use, or are served by, the City's stormwater drainage system. The amount of use attributed to each parcel is measurable by the amount of storm runoff contributed by the property, which is directly proportional to the amount of impervious area on a parcel (such as buildings and concrete). The more impervious area on a property, the more storm runoff the property generates, the more demand placed on the storm drain system.

The amount each parcel uses the stormwater drainage system is computed by the following formula:

(Parcel Area) x (Impervious Percentage) = Drainage Units

The typical percent impervious (% Impervious) for land uses in the City, have been applied for the purposes of estimating the runoff generated by each property. These are shown in Appendix B.

The more Drainage Units a parcel has, the more storm run-off it generates, and the more it uses and impacts the stormwater drainage system.

It is standard practice to relate other land uses to a developed single family residential (SFR) parcel, instead of working exclusively with drainage units. The median size of a SFR parcel will be approximately 0.16 acre. Therefore, it makes sense to relate all parcels to this median residential property. The runoff from a 0.16-acre SFR parcel is set equal to one Drainage Measurement Unit (DMU) and this base DMU is calculated as follows:

(0.16 acres of area) x 50% = 0.0800 Impervious Area = 1 DMU

Single Family Residential Parcels

As a SFR property increases in size over the median parcel size, the typical percentage of impervious area decreases, as shown in Appendix B. Conversely, as a SFR parcel decreases in size below the median parcel size, the typical percentage of impervious area increases, and such increase is typically proportional to the decrease in size. Therefore, SFR properties are separated into five (5) groups. The median parcel area for each group was used and their DMUs are calculated as follows:

SFR Category	DMU/ Formula
SFR1 – SFR parcels 0.16 acres or less	1.00 DMU
SFR2 – SFR parcels 0.17 - 0.25 acres	1.10 DMUs
SFR3 – SFR parcels 0.26 – 0.33 acres	1.175 DMUs
SFR4 – SFR parcels 0.34 – 0.50 acres	1.25 DMUs
SFR5 – SFR parcels greater than 0.50 acres	$1.25 + \frac{[(\text{acres} - 0.50) \times 5\%]}{0.0800} = \text{DMUs}$

Multi-Family Residential Parcels

Multi-Family Residential (MFR) units (including condominiums) are split into categories by the density, or number of dwelling units per acre (DU/Ac) as follows:

MFR Category	Density	% Impervious
MFR1 - High Density	Greater than 18 DU/Ac	75%
MFR 2 - Med Density	10 – 18 DU/Ac	70%

$$\frac{\text{Acreage} \times \%\text{Impervious}}{0.0800} = \text{DMUs}$$

Condominium unit parcel areas are calculated by dividing the total area of the condominium complex (which includes the common area) by the number of condominium units, and the total imperviousness of the entire complex is attributed to each individual condo parcel in the complex. (This divides the runoff of the entire complex to each of the individual units.) Because these condominium common areas are taken into consideration in this manner, they are exempt from the charge.

Non- Residential Parcels

All non-residential parcel DMUs will be based on the impervious area (runoff coefficient) table shown in Exhibit B, using the following formula:

$$\frac{\text{Acreage} \times \%\text{Impervious}}{0.0800} = \text{DMUs}$$

All parcels draining into Rancho Cordova Stormwater Utility Fee-maintained drainage infrastructure are proposed to be charged the same user fee rate per DMU for stormwater runoff treatment. The Rancho Cordova Stormwater Utility Fee is proposed in perpetuity.

For the purposes of this report, City-maintained drainage infrastructure includes streets, pipes, inlets, outlets, and natural drainage courses. Parcels related to these types of property uses are exempt from the runoff charge, as they are part of the infrastructure being funded. Also exempt from the runoff charge is Caltrans right-of-way, because Caltrans handles its own runoff under a separate NPDES permit.

Drainage units may be adjusted based on appeal from the property owner. See the Appeals Process below.

Table 3, below, provides a preliminary summary of DMUs for the various land uses in Rancho Cordova.

Table 3 – Drainage Measurement Unit Summary Table

Landuse Description	Number of Units	Total Area (acres)	Impervious Area (acres)	DMUs
SINGLE FAMILY RESIDENTIAL (SFR1)	15,107	2,028		15,107.00
SINGLE FAMILY RESIDENTIAL (SFR2)	13,790	2,776		15,169.00
SINGLE FAMILY RESIDENTIAL (SFR3)	14	4		16.45
SINGLE FAMILY RESIDENTIAL (SFR4)				-
SINGLE FAMILY RESIDENTIAL (SFR5)				-
MULTI-FAMILY RESIDENTIAL (MFR1)	6,082	282		2,639.06
COMMERCIAL		666	499	6,240.00
INDUSTRIAL		283	226	2,830.00
SCHOOLS		478	239	2,985.00
PRIVATE RECREATION		63	16	195.31
PARKS/GREENBELTS		561	140	1,752.47
PUBLIC		51	15	190.13
TOTAL	**34,993**	**7,190**		**47,124**

Cost Estimate

Table 4 below shows the estimated costs to maintain infrastructure in the developing areas. Unit costs for maintenance were derived using budget information provided by the County, since the County currently maintains the storm drainage system. The budget information is shown in Appendix C.

Table 4 – Estimated Costs

	Estimated Quantity	Unit	Cost ($/unit)	Frequency	Total Cost/Year
Maintenance Costs:					
Trunk Lines (larger than 24") - TV Lines	158210	LF	$ 7.50	25 years	$ 47,463.00
Drainage Lines 10"-24" Cleaning	829850	LF	$ 3.00	10 years	$ 248,955.00
Drainage Lines 10"-24" TV	829850	LF	$ 7.50	25 years	$ 248,955.00
Creek and Channel Maintenance and Repair	65070	LF	$ 0.75	1 year	$ 49,009.83
Pipe Repairs	998920	LF	$ 0.45	1 year	$ 451,380.43
Creeks and Channels Mowing	80	AC	$6,825	1 year	$ 546,000.00
Creeks and Channels Herbicides	80	AC	$680	1 year	$ 54,400.00
HydroMod Basin Maintenance	320	AC	$4,830	1 year	$ 1,545,600.00
Basin De-silt	320	AC	$1,000	25 years	$ 12,800.00
Basins Herbicides	320	AC	$761	1 year	$ 243,360.00
Replacement Costs:					
Inlets	6400	EA	$2,000	75 years	$170,667
Manholes	4460	EA	$3,500	75 years	$208,133
66" Pipe	3950	LF	$550	100 years	$21,725
60" Pipe	10280	LF	$475	100 years	$48,830
54" Pipe	11140	LF	$400	100 years	$44,560
48" Pipe	10210	LF	$325	100 years	$33,183
42" Pipe	28620	LF	$275	100 years	$78,705
36" Pipe	42420	LF	$225	100 years	$95,445
30" Pipe	51050	LF	$175	100 years	$89,338
27" Pipe	540	LF	$150	100 years	$810
24" Pipe	91960	LF	$125	100 years	$114,950
21" Pipe	2230	LF	$115	100 years	$2,565
18" Pipe	100300	LF	$105	100 years	$105,315
15" Pipe	101300	LF	$95	100 years	$96,235
12" Pipe	529890	LF	$85	100 years	$450,407
10" Pipe	4170	LF	$75	100 years	$3,128

Total:	$5,011,917
Annual Fee Administration:	$45,000
Operating (Cash Flow) Reserve (10% of Maintenance Costs):	$344,792
Estimated Total:	**$5,401,709**

Fee Calculations

The estimated annual costs for the proposed storm drain improvements are $5,401,709 as shown in Table 4 above. Dividing that by the total number of proposed DMU's in Rancho Cordova (47,124), the maximum estimated annual Stormwater Utility Fee rate is **$114.63 per DMU**.

This would be the proposed maximum fee rate for fiscal year 2014-15. The maximum rate will be increased each subsequent Fiscal Year by the annual change in the Consumer Price Index (CPI), during the preceding year, for All Urban Consumers, for the San Francisco-Oakland-San Jose areas, published by the United States Department of Labor, Bureau of Labor Statistics (or a reasonably equivalent index should the stated index be discontinued, as determined by the Director of Public Works).

The actual rate to be levied each year will be as approved by the City at a public hearing, after they consider an Annual Fee Report outlining the estimated annual costs of the program for the ensuing fiscal year.

Table 5 provides sample fee calculations for various land uses and parcel sizes.

Table 5 – Sample Calculations

Land Use Description	Total Area (acres)	Impervious Area (acres)	DMUs	Sample Fee
SINGLE FAMILY RESIDENTIAL (SFR1)	0.16		1.000	$ 114.63
SINGLE FAMILY RESIDENTIAL (SFR2)	0.22		1.100	$ 126.09
SINGLE FAMILY RESIDENTIAL (SFR3)	0.30		1.175	$ 134.69
SINGLE FAMILY RESIDENTIAL (SFR4)	0.40		1.250	$ 143.28
SINGLE FAMILY RESIDENTIAL (SFR5)	1.00		1.563	$ 179.10
MULTI-FAMILY RESIDENTIAL (MFR1)	5.00	3.75	46.875	$ 5,373.12
COMMERCIAL[1]	1.00	0.75	9.375	$ 1,074.62
INDUSTRIAL	1.00	0.80	10.000	$ 1,146.27
SCHOOLS	5.00	2.50	31.250	$ 3,582.08
PRIVATE RECREATION	1.00	0.25	3.125	$ 358.21
PARKS/GREENBELTS	2.00	0.20	2.500	$ 286.57
PUBLIC	2.00	0.60	7.500	$ 859.70

[1] Average of Downtown and Neighborhood Commercial as shown in Appendix B

The Preliminary Charge Roll, which is a listing of each parcel to be charged a fee and its proposed maximum fee for FY 2014-15, is on file in the office of the City Clerk.

Appeals Process

If a property owner disagrees with the calculation of his or her fee, based on the parcel area and estimated impervious percentage assigned to the property, then the property owner may appeal the calculation as follows:

1. Property owner must provide written documentation explaining the reason why the charge should be changed. This documentation must include:
    a. The name, phone number, mailing address, and email address, if available, of the property owner.
    b. The Assessor's Parcel Number (APN) of the property in question.
2. If additional documentation is required or insufficient documentation was submitted, a representative of the Department of Public Works (Staff) will notify the property owner in writing.
3. Once Staff has determined that sufficient documentation has been submitted, Staff will perform the initial review. Staff will notify the property owner in writing within four (4) weeks from the time sufficient documentation was submitted as to whether or not the fee amount will be changed.
    a. If the determination is to change the fee amount, then the new fee amount will be documented within the City's fee database.

b. If the determination is that the fee should not be changed, the property owner can appeal Staff's decision to the Director of Public Works. The appeal must be made in writing and returned no later than four (4) weeks from the date of mailing of Staff's initial review decision. The Director of Public Works will notify the property owner in writing within four (4) weeks from the date of receipt of the appeal as to whether or not the fee amount will be changed.

   If the owner of any parcel shall have reason to feel that the computation of the DMU for his/her parcel is not correct, that person may file an appeal with the Director of Public Works in the manner prescribed by the Director of Public Works. The Director of Public Works will consider all data provided by the appellant and shall render a decision in writing. The decision of the Director of Public Works will be final with respect to City action on the appeal.

Appeals will be accepted annually up until June 30 for inclusion on the following fiscal year's property tax roll submittal. However, if an appeal is granted by Staff or the Director of Public Works that does not permit inclusion for the following fiscal year's property tax roll submittal, a reimbursement will be provided to the property owner by the City.

Respectfully submitted:

Harris & Associates

Dennis A. Anderson
Senior Project Manager

APPENDIX A

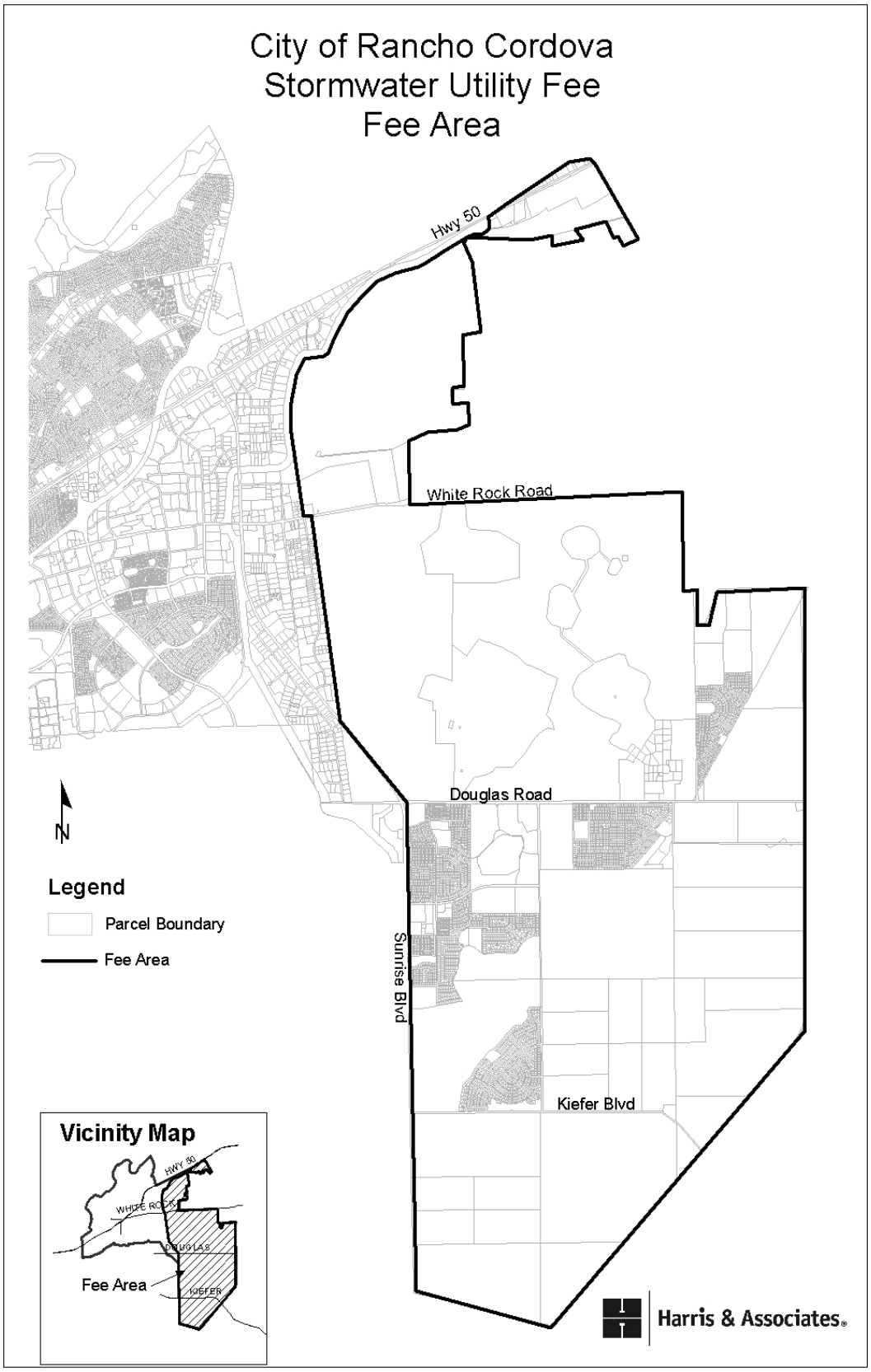
City of Rancho Cordova
Stormwater Utility Fee
Fee Area
Hwy 50
White Rock Road
Douglas Road
Sunrise Blvd
Kiefer Blvd
N
Legend
Parcel Boundary
Fee Area
Vicinity Map
HWY 50
WHITE ROCK
DOUGLAS
KIEFER
Fee Area
Harris & Associates

APPENDIX B

Runoff Coefficient

Land Use		Impervious
Single Family Residential	less than 0.166 acres	50%
Single Family Residential	0.166 acres to 0.250 acres	40%
Single Family Residential	0.251 acres to 0.330 acres	30%
Single Family Residential	0.331 acres to 0.500 acres	25%
Single Family Residential	Over 0.500 acres (excluding the first 0.500 acres)	5%
High-Density Residential (including Apartments and Mobile Home Parks)		75%
Condominiums		70%
Commercial Downtown Areas[1]		80%
Commercial Neighborhood Areas		70%
Industrial		80%
Schools		50%
Parks		25%
Greenbelts		10%

Footnotes:

[1] City of Rancho Cordova Municipal Code Chapter 15.

Sources:

1. Yolo County City/County Drainage Manual, February 2010.
2. Stormwater Quality Design Manual for the Sacramento and South Placer Regions, May 2007.

Appendix C

Cost Information

County of Sacramento/City of Rancho Cordova
Current Storm Drain Maintenance Costs

Pipe Repair Costs

Budget Classification		Repair Type	Actual Expenditures for FY 11/12	FY 13/14 Budget
County North	OCUO	Drain Line Upgrade or Repair	$ 630,912.90	$ 630,912.90
	OFFO	Fence Repair	$ 19,343.41	$ 19,343.41
	OHKO	Inlet Outfall Repair	$ 455,724.02	$ 455,724.02
	OMSO	Erosion Control	$ 26,189.60	$ 26,189.60
	OY8O	Manhole Repair	$ 63,362.44	$ 63,362.44
	RAMP	ADA Compliant Ramp	$ -	$ -
	Overhead	36.39%	$ 435,026.56	$ 435,026.56
		Total Budget=	**$ 1,630,558.93**	**$ 1,630,558.93**
County South	OCUO	Drain Line Upgrade or Repair	$ 105,317.24	$ 105,317.24
	OFFO	Fence Repair	$ 35,802.01	$ 35,802.01
	OHKO	Inlet Outfall Repair	$ 214,660.90	$ 214,660.90
	OMSO	Erosion Control	$ -	$ -
	OY8O	Manhole Repair	$ 8,585.40	$ 8,585.40
	RAMP	ADA Compliant Ramp	$ -	$ -
	Overhead	23.51%	$ 85,667.45	$ 85,667.45
		Total Budget=	**$ 450,033.00**	**$ 450,033.00**
Rancho Cordova	OCUO	Drain Line Upgrade or Repair	$ 222,809.74	$ 229,850.53
	OFFO	Fence Repair	$ 26,326.14	$ 27,158.05
	OHKO	Inlet Outfall Repair	$ 224,877.26	$ 231,983.38
	OMSO	Erosion Control	$ -	$ -
	OY8O	Manhole Repair	$ 4,498.84	$ 4,641.00
	RAMP	ADA Compliant Ramp	$ -	$ -
	Overhead	23.51%	$ 112,504.88	$ 116,060.03
		Total Budget=	**$ 591,016.86**	**$ 609,692.99**
Total LF of Pipes				
		County	7,865,755	7,865,755
		Rancho Cordova	1,349,271	1,349,271
Cost/LF of pipe for Repairs				
		County	**$ 0.26**	**$ 0.26**
		Rancho	**$ 0.44**	**$ 0.45**

* Costs were increased for 12/13 based on comparing actual expenditures in 11/12 with actual expenditures in 12/13.

County of Sacramento/City of Rancho Cordova
Current Storm Drain Maintenance Costs

Creek and Channel Cleaning

Budget Classification		Repair Type	Actual Expenditures FY 11/12	FY 13/14 Budget
County	OCCO	Inspect Channels	$ 149,684.06	$ 149,684.06
	ODSO	Clean, Inspect trach Racks and Box Culverts	$ 203,337.83	$ 203,337.83
	OF8O	Sandbag Distribution	$ 5,184.60	$ 5,184.60
	OFCO	Drainage Response	$ 82,451.66	$ 82,451.66
	OFDO	Concrete Channel Cleaning Bobcat	$ 552,150.54	$ 552,150.54
	OHWO	Vegetation Removal County Forces		
	OJZO	Clean and Inspect Outfall Structures	$ 191,840.84	$ 191,840.84
	OLCO	Access Road Maintenance	$ -	$ -
	OLDO	Mowing		
	OMPO	Expose Pipe End Mechanically	$ 2,720.90	$ 2,720.90
	OMRO	Channel Cleaning Mechanical	$ 49,087.50	$ 49,087.50
	OORC	Rodent Control	$ 32,695.06	$ 32,695.06
	OTVD	Tree Removal	$ 79,463.44	$ 79,463.44
	OVDO	Dry Spoil Dumping	$ 8,137.34	$ 8,137.34
	OWCO	Weed Control Chemical		
	Overhead	36.39%	$ 493,691.29	$ 493,691.29
		Total Budget=	**$ 1,850,445**	**$ 1,850,445**
County	OCCO	Inspect Channels	$ 1,797.15	$ 1,797.15
	ODSO	Clean, Inspect trach Racks and Box Culverts	$ -	$ -
	OF8O	Sandbag Distribution	$ 2,464.80	$ 2,464.80
	OFCO	Drainage Response	$ 1,293.11	$ 1,293.11
	OFDO	Concrete Channel Cleaning Bobcat	$ 144,294.58	$ 144,294.58
	OHWO	Vegetation Removal County Forces		
	OJZO	Clean and Inspect Outfall Structures	$ -	$ -
	OLCO	Access Road Maintenance	$ 57,345.54	$ 57,345.54
	OLDO	Mowing		
	OMPO	Expose Pipe End Mechanically	$ -	$ -
	OMRO	Channel Cleaning Mechanical	$ 32,935.75	$ 32,935.75
	OORC	Rodent Control	$ -	$ -
	OTVD	Tree Removal	$ 214,736.46	$ 214,736.46
	OVDO	Dry Spoil Dumping	$ -	$ -

Budget Classification		Repair Type	Actual Expenditures FY 11/12	FY 13/14 Budget
	OWCO	Weed Control Chemical		
	Overhead	23.51%	$ 106,945.71	$ 106,945.71
		Total Budget=	**$ 561,813**	**$ 561,813**
Rancho Cordova	OCCO	Inspect Channels	$ -	$ -
	ODSO	Clean, Inspect trach Racks and Box Culverts	$ 413.30	$ 413.30
	OF8O	Sandbag Distribution	$ -	$ -
	OFCO	Drainage Response	$ -	$ -
	OFDO	Concrete Channel Cleaning Bobcat	$ 65,905.39	$ 65,905.39
	OHWO	Vegetation Removal County Forces		
	OJZO	Clean and Inspect Outfall Structures	$ -	$ -
	OLCO	Access Road Maintenance	$ -	$ -
	OLDO	Mowing		
	OMPO	Expose Pipe End Mechanically	$ -	$ -
	OMRO	Channel Cleaning Mechanical	$ -	$ -
	OORC	Rodent Control	$ -	$ -
	OTVD	Tree Removal	$ -	$ -
	OVDO	Dry Spoil Dumping	$ -	$ -
	OWCO	Weed Control Chemical		
	Overhead	23.51%	$ 15,592.45	$ 15,592.45
		Total Budget=	**$ 81,911**	**$ 81,911**
Total LF of Channels				
		Rancho Cordova (unlined)	74,628	74,628
		Rancho Cordova (lined)	37,562	37,562
		Total Rancho Cordova	**112,189**	**112,189**
		County (unlined)	1,677,768	1,677,768
		County (lined)	216,153	216,153
		Total County	**1,893,920**	**1,893,920**
Cost/LF of Channel for Cleaning:				
		County	**$ 1.27**	**$ 1.27**
		Rancho	**$ 0.73**	**$ 0.75**

* Costs were increased for 12/13 based on comparing actual expenditures in 11/12 with actual expenditures in 12/13.

County of Sacramento/City of Rancho Cordova
Current Storm Drain Maintenance Costs

Activity	Size/Location	Cost/LF	Frequency	Notes
Pipes/Channels				
Hydro Cleaning	6"-24"	$ 3.00	10 years	
TV Lines	all	$ 7.50	25 years	
Creek and Channel Cleaning	Rancho	$ 0.75	each year	Within SWU Budget
	Sac County	$ 1.27		
Pump Mainteance	Covered within budget			Per County Staff Assume no pumps in new areas.
Repairs	2 crews year round	SWU funds support this		
Hydromod Basin		**cost/ac**		
Maintenance		$ 4,830.00	annul	see detailed estimate
Herbicides		$ 325.00	2 x's/year	
Additional costs				
Pesticide Control Advisor		$ 20,000.00	annually	
Engineering admin support with regulatory agencies		10%	of maint costs/year	
Supervisors and managers		5%	of maint costs/year	

Hydromod Basin Maintenance

Basin Maintenance Costs	Cost per Acre
Trash Clean-up and Disposal (4 x's/year)	$ 1,200
Mowing (2 x's/year)	$ 200
Inspection 4 x's/year	$ 1,600
Erosion Repair	$ 800
Vegetation and Landscape Maintenance	$ 800
Sub-total	**$ 4,600**
Over-head Mark-up (5%)	$ 230
Total Cost	**$ 4,830**

Inspection Includes: Examine gates, fences and access ramp for damage and overgrown vegetation, check basin slopes for erosion, excess vegetation, debris and animal burros, check flow line for excess vegetation and sediment, check for eriosion at water line, large/floating debris, and excess vegetation. Check for debris, creacks and instructure, and erosion at inlets and outlets. Also check access control racks for debris and to snrue they are locked and secured. Check riprap at inlet weir

Appendix D

Detailed Land Use Data

Storm Drain User Fee
City of Rancho Cordova
December 20, 2013

AC, Landuse & units derived from GIS/Aerials

		Arista Del Sol		Arboretum		Douglas 98		Douglas 103		Grantline 208		Montelena		Rio Del Oro		Suncreek		The Ranch (Sunridge)		Sunridge Lot J		Westborough		North Douglas II		Heritage Falls		Anatolia IV		Anatolia		Sunridge			
	Land Use/ Zoning Description	**AC**	**Units**	**AC**	**Units**	**AC**	**Units**	**AC**	**Units**	**AC**	**Units**	**AC 2012**	**Units 2012**	**AC**	**Units**	**AC 2013**	**Units 2012**	**AC 2013**	**Units 2012**	**Est.**	**Units 2013**	**AC**	**Units**	**AC**	**Units**	**AC**	**Units**	**AC**	**Units**	**GIS AC**	**GIS Units**	**GIS AC**	**GIS Units**	**Total Acres**	**Total Units**
Residential:																																			
LDR	SF (2.1-6.0 DU/AC)	35.3	176	144.8	698			3.7	14	44.7	276	71.4	388	1,518.5	7,593	179.4	899	142.3	694	35.8	179	347.2	1,580	17.70	153.00	72.20	303.00	21.60	203.00					2,635	13,156
	MD (6.1-12 DU/AC)															321.5	2,524																	322	2,524
MDR	MD (6.1-18.0 DU/AC)	83.8	556	290.0	2,334 [a]	94.2	528	28.2	287	42.8	227	54.4	402	256.0	2,048	43.7	286 [c]	105.4	685	17.5	192	146.8	1,389			92.10	525.00			450.8	2,831	146.4	941	1,852	13,231
	MD (14.0-29.9 DU/AC)			60.4	885																													60	885
HDR	HD (18.1-40.0 DU/AC)													98.0	1,960	44.2	980	12.2	378 *			30.4	922			6.80	132.00							192	4,372
	HD (30+ DU/AC)			29.5	825														* These may be Attached															30	825
	Residential Total	119.1	732	524.7	4,742	94.2	528	31.9	301	87.5	503	125.8	790	1,872.5	11,601	588.8	4,689	259.9	1,757	53.3	371	524.4	3,891	17.7	153	171	960	22	203	450.8	2,831	146.4	941	**5,090**	**34,993**
Non-Residential:																																			
VC	Village Commercial			16.9				19.5				16.6		20.0		22.0		13.5				93.3												202	
LTC	Local Town Center			30.4										20.0								83.5												134	
RTC	Regional Town Center			0.9										113.0		58.4																		172	
BP	Business Park	6.6		65.0										86.0																				158	
MP	Industrial Park													283.0																				283	
Education:																																			
HS/MS	High School/Middle School			72.6										78.0		110.9 [b]						94.0 [b]												356	
MS	Middle School													20.0																				20	
ES	Elementary School			21.2						10.6				54.0												5.50				10.8				102	
Open Space & Public:																																			
CP	Community Park	11.4		60.7						7.8				107.0		44.9		29.3				52.3												313	
P/QP	Public/Quasi Public			2.0								3.2		7.5		12.3						10.6								1.1				37	
NP	Neighborhood Park	3.1		3.8		8.2		5.2		3.4		20.8		67.5		17.0		8.6		6.4				0.71		17.20		3.70		21.2		7.0		194	
SWD	Storm Water Detention	4.0								15.0		9.6		39.0		53.5		24.3						4.00		17.40				9.5		9.6		186	
WP	Wetland Preserve	55.8						43.8		81.0		54.5		510.0																				745	
DP	Drainage Parkway													138.0		5.0						104.6				15.30						7.2		270	
PR	Private Recreation													54.0												4.20				4.3				63	
OS	Open Space			144.5										22.0										0.60		0.80								168	
OS/P	Open Space/Preserve													12.0		45.6		174.0				47.7												279	
LC	Landscape Corridors	1.1				2.8								82.0		19.2										2.70		1.30		13.4		0.7		123	
GB	Green Belts							2.6						51.0																				54	
ROW	Right-of-way	9.5		104.3				8.5		5.3		22.4		192.0		82.6		20.5		14.5		127.1				6.90		2.20						596	
BR/WP	Reservoir / Wetland Preserve			302.8												205.1								19.80										528	
S	Sewer Lift Station / Utility Substation			1.0																										6.6		6.4		14	
	Vacant (unknown dev plan)																													567.4		27.3		595	
	Total Non-residential	91.5		826.1		11.0		79.6		123.1		127.1		1,956.0		676.5		270.2		20.9		613.1		25.1	0.0	70.0	0.0	7.2	0.0	634.3		58.2		5,590	
	Total Residential & Non-Res	210.6	732.0	1,350.8	4,742.0	105.2	528.0	111.5	301.0	210.6	503.0	252.9	790.0	3,828.5	11,601.0	1,265.3	4,689.0	530.1	1,757.0	74.1	371.0	1,137.5	3,891.0	42.8	153.0	241.1	960.0	28.8	203.0	1,085.1	2,831.0	204.6	941.0	**10,680**	

Notes: All data is from recent plans received in Nov 2013 unless specified otherwise.
[a] Arboretum has 2 MD residential classifications. The first line is for 6.1-13.9 DU/AC (instead of 6.1-18)
[b] Acreage for all schools
[c] Suncreek has 2 MD residential classifications. The second line is for 12.1-18 DU/AC (instead of 6.1-18)

Includes April 2012 Amendment

AC estimated

MEMORANDUM

DATE: October 7, 2019

TO: Honorable Mayor and Council Members

FROM: Elizabeth Sparkman, Community Development Director

SUBJECT: **DISCUSSION OF THE FIRST AMENDMENT TO THE ELLIOTT DEVELOPMENT AGREEMENT FOR RIO DEL ORO PHASE 1**

RECOMMENDATION

Receive information and provide direction to staff.

RESULT OF RECOMMENDED ACTION

The item tonight will brief Council on the terms of a First Amendment to the Development Agreement relative to Rio Del Oro Phase 1, including requirements for the construction of improvements to White Rock Road and proposed adjustments to certain fees. At the next Council meeting in October, staff will return to introduce an Ordinance approving a First Amendment to the Development Agreement relative to the Phase 1 portion of Rio Del Oro.

BACKGROUND

An Amended and Restated Development Agreement (ARDA) for Elliott Homes (2016 Elliott Agreement) relative to the Rio Del Oro project was adopted on September 19, 2016 and has an effective date of October 19, 2016. In an attempt to expedite development, the Elliott Agreement was approved with an incentive package for the first seven years from the effective date or the first 1,200 residential units, whichever first occurs. The incentives included a cash advancement towards developer construction of improvements on White Rock Road and certain fee reductions.

The terms of the 2016 Elliott Agreement did not result in development in a timely manner as expected. Based on Council direction and in a desire to catalyze development in the Rio Del Oro plan area, staff engaged in renewed discussions with Elliott Homes to amend the Agreement and find ways to initiate development of the site.

We are pleased to report that staff has successfully reached the terms of a new amendment that enables Elliott Homes to immediately initiate activities that will result in commencement of onsite grading improvements in 2020.

The City has received federal funding and is pursuing a project for construction of improvements to White Rock Road, including a portion which Elliott Homes is conditioned to construct prior to the first building permit being issued in the Phase 1 project. Under the terms of the First Amendment, the developer is relieved of the obligation to construct the White Rock Road

widening improvements, the City will assume the primary obligation for improvements to White Rock Road from Sunrise Boulevard to just east of the future Rancho Cordova Parkway, and developer is obligated to construct underground utilities and frontage improvements associated with the Rio Del Oro project.

Under the terms of the First Amendment, the incentives and incentive period identified in the Elliott Agreement are being removed and replaced with impact fee adjustments resulting in an overall reduction of $2,500 per home relative to the Phase 1 portion only of Rio Del Oro being constructed by Elliott Homes.

Originally staff planned to introduce an Ordinance and waive the first reading at this Council meeting to approve the First Amendment. However, a discrepancy with the ownership of the 2016 Elliott Agreement was recently discovered. Due to the ownership discrepancy, it is necessary to defer any action on the Ordinance approving the First Amendment to the next council meeting. This will allow time to prepare and return with the necessary action to resolve the ownership discrepancy on the 2016 Elliott Agreement through re-adoption and minor amendment of the Elliott ARDA prior to taking action on the First Amendment. Both actions will return for Council approval on October 21, 2019.

FISCAL IMPACT

The fees being adjusted will have limited impact to special revenue funds some of which will be partially offset by grant revenues. There is no impact to the City's general fund.

ATTACHMENT

1. Draft First Amendment for Phase 1

LANDOWNER OFFICIAL BUSINESS
Document entitled to free recording
Government Code Section 6103

RECORDING REQUESTED BY
AND WHEN RECORDED MAIL TO:

City of Rancho Cordova
2729 Prospect Park Drive
Rancho Cordova, CA 95670
Attn: City Clerk

(SPACE ABOVE THIS LINE RESERVED FOR RECORDER'S USE)

FIRST AMENDMENT OF

AMENDED AND RESTATED DEVELOPMENT AGREEMENT

BY AND BETWEEN

THE CITY OF RANCHO CORDOVA AND ALTA VISTA, LLC

RELATIVE TO THE RIO DEL ORO PROJECT

FIRST AMENDMENT OF AMENDED AND RESTATED DEVELOPMENT AGREEMENT BY AND BETWEEN THE CITY OF RANCHO CORDOVA AND ALTA VISTA, LLC RELATIVE TO THE RIO DEL ORO PROJECT

This First Amendment of the Amended and Restated Development Agreement ("First Amendment") is entered into as of this ____ day of _____, 2019, by and between the CITY OF RANCHO CORDOVA, a municipal corporation ("City"), and ALTA VISTA, LLC, an Arizona limited liability company ("Landowner") pursuant to Sections 65864 through 65869.5 of the Government Code of California. City and Landowner are collectively referred to as the "Parties."

RECITALS

A. City and WHITEROCK, LLC, a California limited liability company dba WHITE ROCK, LLC, California limited liability company ("WHITE ROCK") entered into an Amended and Restated Development Agreement (the "ARDA") which was approved by the City Council on _____ and recorded on _____, in the Official Records of Sacramento County in Book _____, Page ____. Except as otherwise defined herein, all capitalized terms used herein shall have the meanings ascribed thereto in the ARDA.

B. City and WHITE ROCK entered into the ARDA relative to development within a 1,516-acre portion of the Rio Del Oro Specific Plan Area as such is more precisely defined in Exhibits "A-1" and "A-2" of the ARDA (the "Property").

C. WHITE ROCK assigned its interest in the ARDA to Landowner pursuant to that certain assignment and assumption agreement dated as of _____ __, ____, and recorded on _____ __, ____, in the Official Records of Sacramento County in Book _____, Page ___.

D. This First Amendment affects and applies to only a certain 169.7-acre portion of the Property identified as "Phase 1" on that certain large lot map approved by the City Council on August 29, 2016 by Resolution 107-2016 and described in Exhibit "A-1" and Exhibit "A-2" attached hereto (the "First Amendment Property"). Landowner owns the entire First Amendment Property in fee title. This First Amendment shall run with the First Amendment Property. This First Amendment is authorized by Section 14.1 of the ARDA.

E. This First Amendment is intended to reduce certain City fees and eliminate certain other City development incentives in exchange for specific commitments from Landowner to commence improvements for and construction of production homes on the First Amendment Property. This First Amendment is only being approved for the First Amendment Property, not for the entire Property or the entire RDO Specific Plan, because the First Amendment Property is the first project that implements the Specific Plan and it faces a combination of unique opportunities for immediate development and barriers to development, including but not limited to establishment of the Open Space Preserve, environmental cleanup and remediation, and onerous infrastructure requirements. City recognizes such barriers as well as the potential for development of the First Amendment Property to catalyze desired planned growth within the Rio Del Oro Specific Plan Area and City. In exchange for Landowner's commitment to make diligent and commercially reasonable efforts and specific commitments to commence certain improvements earlier than would otherwise occur under current market conditions, City desires

to provide certain development incentives to Landowner. City also desires to obligate Landowner to pay a Community Renovation Fee (as defined herein).

F. On _____, 2019, the City Council held a public hearing and introduced City Council Ordinance No. __-2019 approving this First Amendment. City adopted City Council Ordinance ___- 201_ on _____, 2019. On_____, by Ordinance No. _____-2019, the City Council found the adoption of this First Amendment exempt from CEQA under CEQA Guideline 15061(b)(3).

NOW THEREFORE, THE PARTIES MUTUALLY AGREE AS FOLLOWS:

1. **Amendment of the ARDA**. The following sections and exhibits of the ARDA for the First Amendment Property are hereby amended as follows:

1.1. **Revised Section 3**. The Definitions set forth in Section 3 are revised as follows:

1.1.1. The term "Citywide Park Fees" as set forth and defined in Section 3 is hereby deleted.

1.1.2. The term "Community Places Fee" shall be added to read as follows: "Community Places Fee" means the Community Places Fee totaling One Thousand Three Hundred Sixty-Six Dollars and Seventy-Eight Cents ($1,366.78) per EDU as set forth in Section 6.1.

1.1.3. The term "Community Renovation Fee" shall be added to read as follows: "Community Renovation Fee" means the Community Renovation Fee totaling Seven Hundred Fifty Dollars and No Cents ($750.00) as set forth in Section 6.6.

1.1.4. The term "Fee Incentives" shall be added to read as follows: "Fee Incentives" shall mean the reduced amount of certain nexus-based fees applicable to the First Amendment Property as set forth in Section 5.7.1.

1.1.5. The term "Incentive Period" as set forth and defined in Section 3 is hereby deleted.

1.1.6. The term "Interim Community Places Fee" as set forth and defined in Section 3 is hereby deleted.

1.1.7. The term "Interim Park Development Fee" as set forth and defined in Section 3 is hereby deleted.

1.1.8. The term "Park Development Fee" shall be added to read as follows: "Park Development Fee" means the Park Development Fee totaling Nine Thousand Seven Hundred Eighty-One Dollars and Thirty-Six Cents ($9,781.36) per EDU as set forth in Section 6.1.

1.1.9. The term "White Rock Road Construction Project" shall be added to read as follows: "White Rock Road Construction Project" shall mean

City's construction of the section of White Rock Road depicted on Exhibit B attached hereto between Fitzgerald Road and the White Rock Road/Rancho Cordova Parkway intersection pursuant to plans to be approved by City.

1.1.10. The term "White Rock Road Contribution" as set forth and defined in Section 3 is hereby deleted.

1.2. **Revised Section 4.1**. Section 4.1 is revised in its entirety to read as follows:

4.1 **Effective Date**. The Effective Date of this First Amendment is _____, 201_ which is the effective date of City Ordinance No. _____, adopting this First Amendment.

1.3. **Revised Section 4.2**. Section 4.2 is revised in its entirety to read as follows:

4.2. **Term**. The term of this First Amendment commences on the Effective Date and extends for a period of fifteen (15) years from the Effective Date, unless said term is terminated, modified or extended consistent with the terms of the ARDA. This First Amendment automatically terminates upon expiration of the applicable term unless otherwise extended by the Parties, and shall then be of no further force and effect. If and when this First Amendment expires, Landowner shall thereafter retain the right to develop under the remaining term of the ARDA.

1.4. **Revised Section 5.7.1**. Section 5.7.1 is revised in its entirety to read as follows:

5.7.1 **Fee Incentives**. Notwithstanding anything to the contrary in Section 5, in order to incentivize development of the First Amendment Property earlier than would otherwise occur under current market conditions, City hereby agrees to reduce the amount of certain nexus-based fee program fees applicable to the First Amendment Property as set forth in this Section 5.7.1. Landowner shall pay the following fees in the following amounts): (i) the Transportation Development Impact Fee shall total Sixteen Thousand Nine Hundred and Nine Dollars and Sixty-Seven Cents ($16,909.67) per EDU; (ii) the CFF Community Facilities Fee shall total Three Thousand Three Hundred Sixteen Dollars and Sixty-Two Cents ($3,316.62) per EDU; and (iii) the CFF Library Fee shall total Five Hundred Eighty-Nine Dollars and Fifty-Five Cents ($589.55) per EDU (together, the "Fee Incentives"). The timing of payment of such fees by Landowner shall be as set forth in the applicable fee program. The Fee Incentives will be adjusted on January 1, 2022 and annually thereafter no later than January 15 pursuant to the method described in the relevant fee program nexus study.

1.5. **Revised Section 6.1**. Section 6.1 is revised in its entirety to read as follows:

6.1 **Park Development and Community Places Dedication and Fee Obligations**. Landowner's obligation to dedicate land for Parks and Community Places shall be satisfied by Landowner's dedication of the lands identified in Exhibit 7-1 of the Amended Specific Plan. City agrees and acknowledges that Landowner's dedication of the lands identified in Exhibit 7-1 of the Amended Specific Plan will satisfy Landowner's dedication requirements pursuant to Ordinance No. 9-2016. Landowner shall pay the Park Development Fee and Community Places Fee when each building permit for residential development is issued within the First Amendment Property. The Park Development Fee and the Community Places Fee will be adjusted on January 1, 2022 and annually thereafter no later than January 15 as follows:

(a) A "mean" index will be computed by averaging the index for 20 U.S. cities with the index for San Francisco by resort to the October issue of the Engineering News Record magazine Construction Cost Index.

(b) An adjustment factor shall be computed by dividing the "mean" index as calculated in subsection (a) of this section by the "mean" index for the previous October.

(c) The adjusted Park Development Fee and Community Places Fee shall be calculated by multiplying the adjustment factor, as calculated in subsection (b) of this Section 6.1, by the Park Development Fee and the Community Places Fee, as applicable, in place prior to the annual adjustment."

1.6. **New Section 6.6**. Section 6.6 is added to read as follows:

"6.6 **Community Renovation Fee**. Landowner shall pay the Community Renovation Fee for each EDU, provided that the Community Renovation Fee shall not be paid for any unit constructed on any parcel dedicated to City for affordable housing. Said Community Renovation Fee shall be paid to City when each building permit for residential development is issued within the First Amendment Property. The Community Renovation Fee will be adjusted on January 1, 2022 and annually thereafter no later than January 15 using the same method as described in Section 6.1. It shall be used by City, at its sole discretion, to acquire, renovate, repair, improve, or maintain community facilities, parks, neighborhood greens, or other open space in City. This agreement to pay the Community Renovation Fee is made voluntarily by Landowner. It is in addition to and not creditable against any other fees and/or construction and dedication obligations as set forth herein.

1.7. **Revised Section 9**. Section 9 is revised in its entirety to read as follows:

"9. **Affordable Housing**. Landowner shall comply with all terms, conditions and requirements under the Affordable Housing Plan Agreement between City and Landowner attached hereto as **Exhibit C**, except as follows: (i) the "Affordable Housing In Lieu Fee" required to be paid for the Project pursuant to Section 2 thereof shall be reduced to Three Thousand Seven Hundred Dollars and No Cents ($3,700.00) per MRU (as defined therein); and (ii) for purposes of Section 2.2 thereof, all references to the "Incentive Period" are null and void and said fee of Three Thousand Seven Hundred Dollars and No Cents ($3,700.00) per MRU will be adjusted on January 1, 2022 and annually thereafter no later than January 15 as provided in Section 2.2. Any failure by Landowner to perform any term, condition, or requirement of the Affordable Housing Plan applicable to the First Amendment Property is a violation of this First Amendment, subject to default under Section 17. City acknowledges that Landowner's compliance with all the terms, conditions, and requirements of the Affordable Housing Plan applicable to the First Amendment Property shall fully satisfy Landowner's obligations to provide affordable housing or inclusionary housing or other such fee or Exaction related thereto associated with development of the First Amendment Property. In the event Landowner receives any credits pursuant to the Affordable Housing Plan as a result of exceeding its obligations thereunder, including but not limited to credits for exceeding dedication requirements, City hereby agrees to allow Landowner to apply any such credits to any of Landowner's other affordable housing obligations on other projects within City."

1.8. Revised Section 13.1. Section 13.1 is revised in its entirety to read as follows:

"13.1 **White Rock Road Improvements**. Landowner and City agree to complete improvements as summarized in this Section 13.1.

A. Landowner shall make diligent and commercially reasonable efforts as follows with respect to the First Amendment Property:

i. Commence mass grading for that certain portion of the First Amendment Property identified as "Parcel 67" on that certain large lot map approved by the City Council on August 29, 2016 by Resolution 107-2016 by August 1, 2020.

ii. Commence any below ground improvements in or under White Rock Road between Fitzgerald Road and the White Rock Road/Rancho Cordova Parkway intersection, including but not limited to, sewer, gas, electric, data, and telephone prior to the earlier of (i) August 1, 2020 or (ii) City's approval of the

construction contract for the White Rock Road Construction Project.

iii. Provided City has commenced the White Rock Road Construction Project, commence in tract subdivision improvements for that certain portion of the First Amendment Property identified as "Parcel 67 Sub-Phase A" on that certain small lot map approved by the City Council on June 19, 2017 by Resolution 90-2017 by May 1, 2021.

iv. Provided City has commenced the White Rock Road Construction Project, obtain the first model home construction permit from City by November 1, 2021.

B. Provided City has substantially completed the White Rock Road Construction Project, Landowner must complete all of the above-described improvements and commence construction of production homes on the First Amendment Property by November 1, 2023.

C. In order to incentivize development of the First Amendment Property earlier than would otherwise occur under current market conditions, City hereby agrees to fund, permit, design, construct, and/or otherwise facilitate certain improvements associated with White Rock Road as described in this Section 13.1. City shall make diligent and reasonable efforts to commence the improvements described in this Section 13.1 by November 1, 2020. City acknowledges that the improvements described in this Section 13.1 substantially comply with and satisfy large lot map condition of approval 47 and small lot map condition of approval 54. In the event of any conflict between this Section 13.1 and any of the other Entitlements, this Section 13.1 shall control.

i. Road/Signal Improvements

a. City shall fund, permit, design, and construct the White Rock Road Construction Project, including but not limited to all surface improvements, grading, aggregate base, asphalt concrete, signal interconnect, striping, median and landscaping improvements north of the southern back of curb. Landowner shall reimburse City for City's construction of the southern curb and gutter, and associated grading and aggregate base under the southern curb and gutter within the limits of the White Rock Road Construction Project as depicted in Exhibit B in the amount of one-hundred and ten percent (110%) of the reasonable hard

construction costs of such improvements as determined by the construction contract within thirty (30) days of Landowner's receipt of an invoice from City.

b. City shall fund, permit, design, and construct surface improvements necessary to complete the interim signal at the intersection of White Rock Road and Rancho Cordova Parkway.

c. City shall fund, permit, design, and install conduit necessary for the future installation of a signal at the intersection of White Rock Road and Arenal Drive at the main entrance to the subdivision.

d. If necessary, City shall coordinate with SMUD to relocate utility poles on the north side of White Rock Road within the limits of the White Rock Road Construction Project. In the event such relocation is necessary, City shall fund the same.

ii. Waterline Improvements

a. City shall permit, design, and construct all improvements associated with the three (3) fire hydrants located between Luyung Drive and Rancho Cordova Parkway. Landowner shall reimburse City for City's construction of such improvements in the amount of one-hundred and ten percent (110%) of the reasonable hard construction costs of such improvements, plus any permitting, connection, or other fees paid to the water company within thirty (30) days of Landowner's receipt of an invoice from City.

iii. Drainage Improvements

a. City shall permit, design, and construct (i) the storm drain line within White Rock Road, (ii) the drainage outfall flowing to the south within the White Rock Road right-of-way, (iii) the drainage inlets and laterals on the south side of White Rock Road, and (iv) associated improvements within the White Rock Road Construction Project. City shall fund the reasonable hard construction costs of such improvements using funding available for the

same from City's road fee program and the County's Zone 11-A drainage fee program. In the event the reasonable hard construction costs of such improvements exceed the funding available for the same from City's road fee program and the County's Zone 11-A drainage fee program combined, Landowner shall reimburse City in the amount of one-hundred and ten percent (110%) of such excess reasonable hard construction costs per the construction contract within thirty (30) days of Landowner's receipt of an invoice from City.

1.9. **Revised Exhibits**. Exhibit "E" to the ARDA is deleted. Exhibit "H" to the ARDA shall be replaced in its entirety with Exhibit B ("White Rock Road Section at RDO") attached to this First Amendment.

2. **Consistency with General Plan**. The City Council has found and determined that this First Amendment is consistent with the General Plan and the Rio Del Oro Specific Plan.

3. **Amendment Limited to First Amendment Property**. This First Amendment is limited to and applies only to development of the First Amendment Property and does not affect or apply in any manner with respect to the development of any other property within the Rio Del Oro Specific Plan Area, including without limitation, any other portion of the Property.

4. **Amendment**. This First Amendment amends, but does not replace or supersede, the ARDA, except as specified herein. As amended hereby with respect to the First Amendment Property, the ARDA remains in full force and effect.

5. **Incorporation of Recitals**. The Preamble, Recitals, and all exhibits attached hereto are incorporated into this First Amendment as if set forth herein in full.

6. **Effective Date and Term of First Amendment.** The Effective Date of this First Amendment is _____, 201_ which is the effective date of City Ordinance No. _____, adopting this First Amendment.

7. **City Manager Authorization**. City, a municipal corporation, has authorized this First Amendment to be executed in two duplicate originals, each of which is deemed to be an original, by its City Manager and attested to by its City Clerk under the authority of Ordinance No. _____ adopted by the City Council on the _____ day of _____, 201_, and has caused this First Amendment to be executed.

(Signatures appear on next page.)

ATTACHMENT 1

"CITY"

CITY OF RANCHO CORDOVA,
a municipal corporation

By: _____
Name: _____
Its: City Manager
Date: _____

"LANDOWNER"

ALTA VISTA, LLC
an Arizona limited liability company

By: _____
Name: Harry C. Elliott III
Its: President
Date: _____

ATTEST:

_____
City Clerk

APPROVED AS TO FORM:

_____
Adam U. Lindgren
City Attorney

Date: _____

EXHIBIT LIST

Exhibit A-1:	Legal Description of First Amendment Property
Exhibit A-2:	Map of First Amendment Property
Exhibit B:	White Rock Road Cross Section
Exhibit C:	Affordable Housing Plan

EXHIBIT "A-1"

LEGAL DESCRIPTION
FIRST AMENDMENT PROPERTY

A portion of Lot 'A' of that certain Lot Line Adjustment Resolution No. 97-BLS-0637 recorded in Book 971119, Page 807, Official Records of Sacramento County, also being a portion of Parcel 15 as shown on the Revised Parcel Map, filed in Book 55 of Parcel Maps, at Page 29, in said County, located in the City of Rancho Cordova, County of Sacramento, State of California, described as follows:

BEGINNING at a point being the northwest corner of said Lot 'A'; thence from said **POINT OF BEGINNING**, along the north line of said Lot 'A', the following five (5) arcs, courses, and distances:

1) North 80°31'07" East, a distance of 2579.34 feet;
2) from a radial line which bears North 09°27'47" West, along a non-tangent curve concave to the south, having a radius of 1500.00 feet, easterly 314.43 feet along said curve through a central angle of 12°00'37";
3) South 87°27'10" East, a distance of 389.84 feet;
4) along a tangent curve concave to the north, having a radius of 3000.00 feet, easterly 435.69 feet along said curve through a central angle of 08°19'16";
5) North 84°13'34" East, a distance of 718.52 feet;

Thence leaving said north line, through said Lot 'A' the following five (5) courses and distances:

1) South 00°28'57" East, a distance of 317.24 feet;
2) South 52°47'18" West, a distance of 4390.95 feet;
3) South 03°12'51" East, a distance of 572.94 feet;
4) South 52°47'18" West, a distance of 177.92 feet;
5) South 82°56'01" West, a distance of 398.53 feet to the west line of said Lot 'A';

Thence along said west line, North 07°05'25" West, a distance of 3184.57 feet; thence continuing along said west line, North 08°15'52" West, a distance of 30.44 feet to the **POINT OF BEGINNING**.

Containing 173.871 Acres, more or less.

September 27, 2019

END OF DESCRIPTION

PREPARED BY WOOD RODGERS, INC.
SACRAMENTO, CALIFORNIA

PROFESSIONAL LAND SURVEYOR
DENNIS L. BARBER
EXP. 12-31-19
No. 8067
STATE OF CALIFORNIA

9/30/19

EXHIBIT "A-2"
RIO DEL ORO
FIRST AMENDMENT PROPERTY

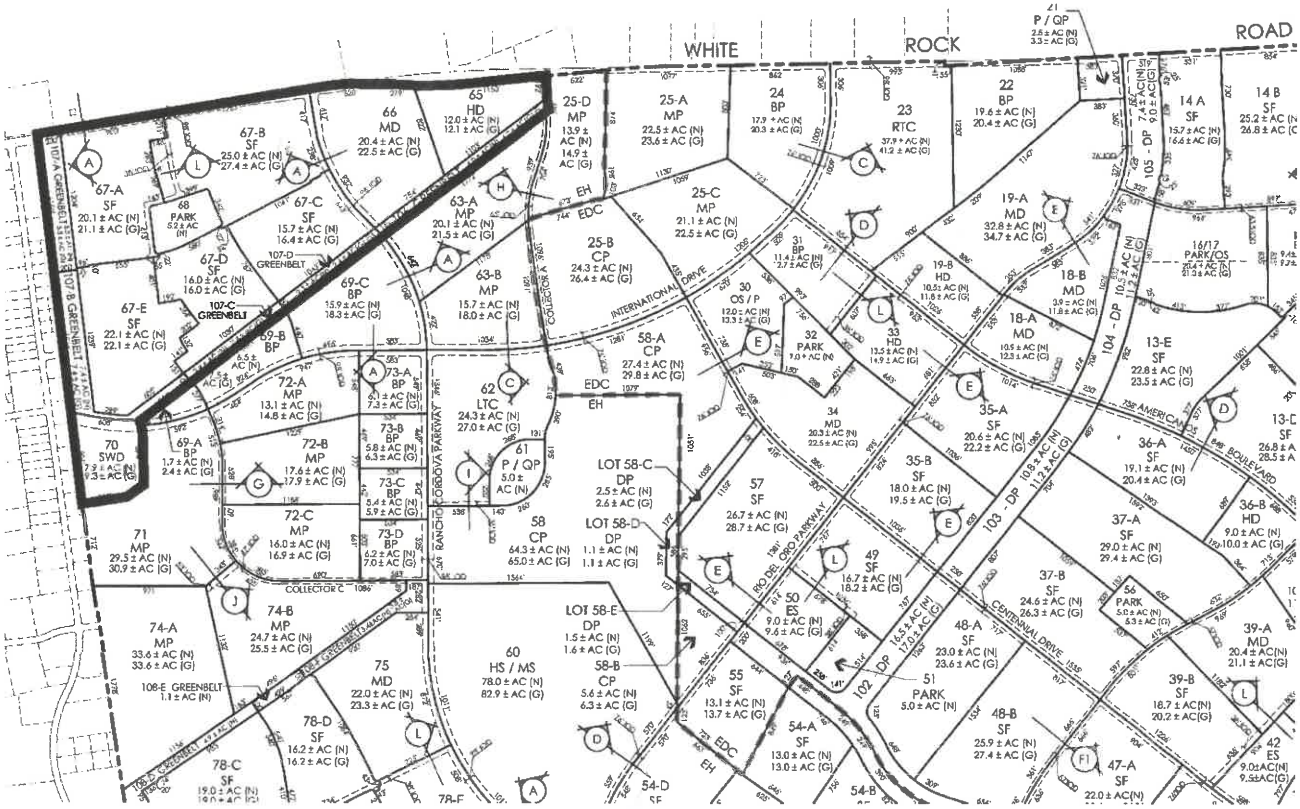

EXHIBIT B

RIO DEL ORO

WHITE ROCK ROAD - PROPOSED SECTION AT RDO

ELLIOTT HOMES

RANCHO CORDOVA CALIFORNIA

SEPTEMBER 23, 2019

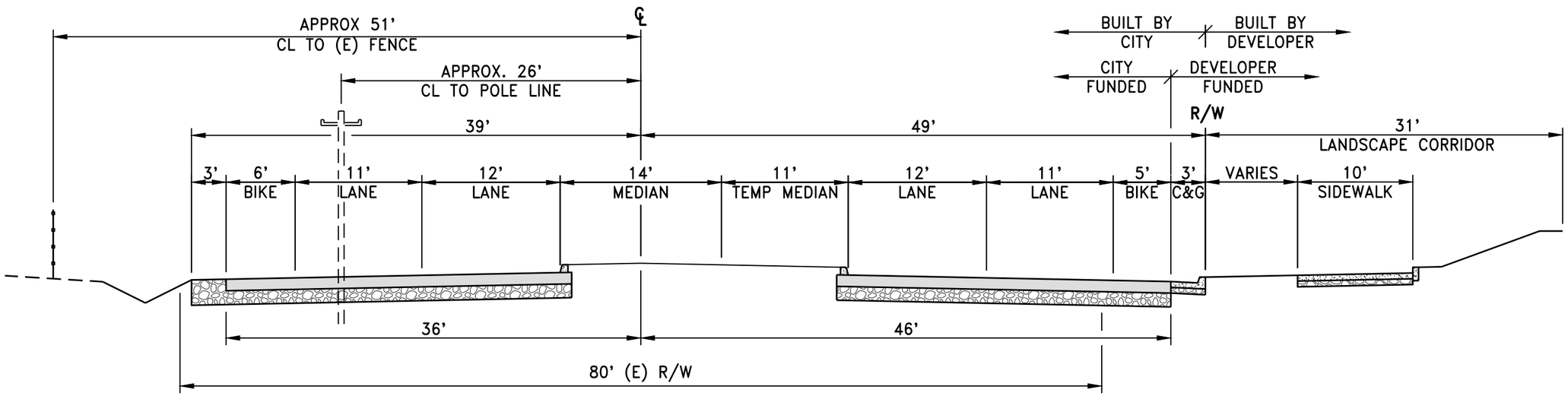

FOUR LANE ALTERATIVE

WOOD RODGERS
BUILDING RELATIONSHIPS ONE PROJECT AT A TIME
3301 C ST, BLDG. 100-B TEL 916.341.7760
SACRAMENTO, CA 95816 FAX 916.341.7767

000-s\1032-RioDelOro\RioDelOro-Elliott\Civil\Exhibits\EXH-WRR-SECTION.dwg 9/23/2019 11:43 AM Mike Motroni

ATTACHMENT 1

EXHIBIT C

Sacramento County Recorder
Donna Allred, Clerk/Recorder
BOOK 20170207 PAGE 1290
Tuesday, FEB 07, 2017 2:21:24 PM
Ttl Pd $0.00 Rcpt # 0009431021
MRN/66/1-22

RECEIVED FEB 17 2017

OFFICIAL BUSINESS
Document entitled to free recording
Government Code Section 6103

RECORDING REQUESTED BY AND
WHEN RECORDED, MAIL TO:

City of Rancho Cordova
2729 Prospect Park Drive
Rancho Cordova, CA 95670
Attention: City Clerk

(SPACE ABOVE THIS LINE RESERVED FOR RECORDER'S USE)

AFFORDABLE HOUSING PLAN AGREEMENT FOR THE RIO DEL ORO SPECIFIC PLAN BY AND BETWEEN THE CITY OF RANCHO CORDOVA, AND ELLIOTT HOMES, INC.

THIS AFFORDABLE HOUSING PLAN AGREEMENT ("AHP" or "Agreement"), and the requirements herein, are agreed upon by and between the CITY OF RANCHO CORDOVA ("City") and Elliott Homes, Inc., an Arizona corporation ("Landowner"), as of September 19, 2016. City and Landowner are hereinafter sometimes collectively referred to as the Parties. This AHP shall be binding on Landowner and on any and all of Landowner's successors and assigns developing the real property described in Exhibit 1 and depicted in Exhibit 2 hereto and incorporated herein (the "Property") within the Rio Del Oro Specific Plan ("RDOSP").

RECITALS

WHEREAS, pursuant to California Government Code section 65580, the Legislature has established the following policies related to the provision of affordable housing: 1) the availability of housing is of vital statewide importance, and the early attainment of decent housing and a suitable living environment for every Californian, including farmworkers, is a priority of the highest order; 2) the early attainment of this goal requires the cooperative participation of government and the private sector in an effort to expand housing opportunities and accommodate the housing needs of Californians of all economic levels; 3) the provision of housing affordable to low- and moderate-income households requires the cooperation of all levels of government; 4) local and State governments have a responsibility to use the powers vested in them to facilitate the improvement and development of housing to make adequate provision for the housing needs of all economic segments of the community; and 5) the Legislature recognizes that in carrying out this responsibility, each local government also has the responsibility to consider economic, environmental, and fiscal factors and community goals set forth in the general plan and to cooperate with other local governments and the State in addressing regional housing needs; and

WHEREAS, the City of Rancho Cordova Housing Element, adopted December 16, 2013 by City Council Resolution No. 119-2013 ("Housing Element") states that all large-scale development in the City's undeveloped areas, generally located south of Highway 50, is

required to provide a range of housing opportunities responding to the housing needs associated with the proposed development; and

WHEREAS, Policy H.1.5 of the Housing Element states that "[d]evelopers of new residential projects within the newly developing areas of the City (generally in the large, vacant areas south of Highway 50) shall prepare an Affordable Housing Plan (Plan) for the project for City review and approval that identifies the project's plan for providing affordable housing;" and

WHEREAS, Housing Element Action H.1.5.1 provides that the Affordable Housing Plan "shall be approved in conjunction with the earliest stage of project entitlement, typically with the City Council approval of the Specific Plan, Development Agreement, or other primary land use entitlement," and "[i]n order to ensure the production and preservation of housing affordable to the City's workforce, no productive, reasonable program or incentive option will be excluded from consideration within project-specific Affordable Housing Plans...;" and

WHEREAS, on September 20, 2012, the Sacramento Area Council of Governments' ("SACOG") Board of Directors unanimously approved the 2013-21 Regional Housing Needs Plan ("RHNP"). This action was the final stage in the adoption of an eight-year plan for the Regional Housing Needs Allocation ("RHNA"). RHNA is a State requirement to determine the number of housing units that cities and counties must plan for in their housing element updates. Pursuant to California Government Code section 65583, local governments are required to update their housing elements to plan to accommodate their entire RHNA share by income category; and

WHEREAS, the City has received an allocation from SACOG of the projected share of the Region's total growth within the City, including both a projected allocation of total housing units and a distribution of this projected growth by family income categories; and

WHEREAS, the City intends to meet Housing Element Policies H.1.5, H.1.5.1 and the requirements of state law by demonstrating that it is providing sufficient zoning capacity to accommodate a portion of the RHNA for housing available to a variety of income categories within the RDOSP area ("RDOSP Area"); and

WHEREAS, based on the foregoing requirements, this AHP is comprised of two major components: the Property's fair share of the RHNA allocation and affordable housing performance; and

WHEREAS, the City Council supports and has determined that an Affordable Housing In Lieu Fee of Four Thousand Five Hundred Fifty Seven Dollars ($4,557.00) per MRU in the RDOSP Area will, when combined with the City's non-residential linkage fees as set forth in Rancho Cordova Municipal Code Chapter 16.89 and Sacramento County Code Chapter 16.89, state and federal tax credits, and other state, federal and local grant and loan program funds, result in sufficient funds for City, or another third party, to develop within the City approximately six percent (6%) of new residential development as affordable rental units and one percent (1%) as affordable for-sale units; and

WHEREAS, in preparing this AHP, the City and Landowner considered economic, environmental, and fiscal factors and community goals set forth in the general plan; and

WHEREAS, Landowner has agreed to meet the affordable housing obligations as identified in this AHP. This AHP fully satisfies Landowner's obligations pursuant to Housing Element Policy H.1.5 and all action items related thereto; and

WHEREAS, pursuant to the City's Housing Element, the requirement to enter into this AHP is a condition of approval for projects within the RDOSP Area. Any violation by Landowner of the terms of this AHP shall be considered a violation of the conditions of approval and shall permit the City to proceed with enforcement action as further set forth in this Agreement.

THEREFORE, in consideration of the foregoing recitals and the mutual covenants contained herein, the Parties hereby agree to the following AHP:

DEFINITIONS

All capitalized terms used in this Agreement shall have the meaning set forth in this Section. Any capitalized terms not defined herein shall have the meaning set forth in the Amended and Restated Development ("ARDA") by and between Elliott Homes, Inc. and the City, adopted by the City by Ordinance No. 10-2016, on September 19, 2016;

"AHP" shall mean this Affordable Housing Plan Agreement, entered into between the City and Landowner and approved by Resolution No. 107-2016, on September 19, 2016;

"Affordable Housing In Lieu Fee" is the fee payable pursuant to this AHP, in the amount of Four Thousand Five Hundred Fifty Seven Dollars ($4,557.00) per MRU, and as may be adjusted as allowed by Section 2.2 of this AHP.

"Affordable Units" shall mean those units (whether single family or multi-family, and regardless of density) designated by the City to be affordable under the provisions of Section 4 of this AHP (and which are subject to a regulatory agreement as specified in that Section), with income levels calculated pursuant to regulations issued by the California Department of Housing and Community Development ("HCD") (with specific application to Sacramento County), and as may be adjusted from time to time by HCD based upon size of household, regional cost of living and other relevant factors. Subject to the regulations issued by HCD, City may designate Affordable Units as those units available to families with incomes ranging from zero to 120% of median family income.

"ARDA" shall mean the Amended and Restated Development Agreement ("ARDA") by and between Elliott Homes, Inc. and the City, adopted by the City by Ordinance No. 10-2016, on September 19, 2016.

"HCD" shall mean the State of California, Department of Housing and Community Development (or any successor thereto).

"HD" shall refer to the acreage designated in the RDOSP for development at or above an average density of 26 units per acre.

"Housing Element" shall mean the Housing Element in effect as of the effective date of this AHP, which was adopted on December 16, 2013 by City Council Resolution No. 119-2013.

"Market Rate Units" ("MRU") shall mean those units approved for residential development (whether single family or multi-family, and regardless of density) within the

RDOSP Area that have not been designated by the City to be Affordable Units pursuant to Section 4 of this AHP.

"Property" shall mean the 1,516-acre portion of the RDOSP Area owned by Landowner, located in the City of Rancho Cordova, County of Sacramento, and more particularly described in Exhibit 1 and depicted in Exhibit 2.

"RDOSP" shall mean the Rio del Oro Specific Plan, and all amendments thereto, whether approved before or after the date of this AHP.

"RDOSP Area" shall mean the entire property included within the Amended Rio del Oro Specific Plan, approved by the City on September 19, 2016, by Ordinance No. 9-2016.

"RHNA" shall mean the Regional Housing Needs Allocation adopted by the Sacramento Area Council of Governments on September 20, 2012 to cover the time period 2013-21.

"RHNA Acreage" shall mean those sites identified on Exhibit 3 to this AHP, which are designated in the RDOSP for high-density development at no less than 26 units per acre.

"RHNP" shall mean the Regional Housing Needs Plan as established by SACOG on September 20, 2012 for the period 2013-21.

"SACOG" shall mean the Sacramento Area Council of Governments.

AGREEMENT

1. Property Subject to this Affordable Housing Plan. Landowner owns fee title to the Property. This AHP shall apply to, and be recorded on, the Property. The remaining portion of the RDOSP Area shall also be subject to a separate AHP, entered into between the City and the owner of fee title to that other portion of the RDOSP Area. Landowner understands, and City represents, that City intends to impose similar terms and conditions related to affordable housing on all portions of the RDOSP Area.

2. Payment of Affordable Housing In Lieu Fee. All MRU (both single family and multi-family) shall pay an Affordable Housing In Lieu Fee of Four Thousand Five Hundred Fifty Seven Dollars ($4,557.00) per MRU. The Affordable Housing In Lieu Fee shall be due and payable at the time a building permit is issued for the unit or multi-family structure.

2.1. Exemptions. No Affordable Housing In Lieu Fee shall be required to be paid by any Affordable Units developed on the Property or by any development or structure subject to a non-residential building permit. Any development or structure subject to a non-residential building permit shall pay the housing trust development impact fee established pursuant to Rancho Cordova Municipal Code Chapter 16.89 and Sacramento County Code Chapter 16.89.

2.2. Increases to Affordable Housing In Lieu Fee. The Affordable Housing In Lieu Fee shall not be subject to increase during the "Incentive Period," as that phrase is defined in the ARDA between the Parties. After the expiration of the Incentive Period, the Affordable Housing In Lieu Fee required under this AHP shall be adjusted annually in January based upon the October to October index value increase found in the 20 City Building Cost Index published in Engineering News Record (ENR), averaged with the ENR's index of the City

of San Francisco between October and October of each year.

3. **Regional Housing Needs Allocation for the RDOSP Area**. Based on the RHNA, City has designated 98 acres within the RDOSP Area for high density development, and City has identified as "RHNA Acreage" the property identified on Exhibit 3 to this AHP. Landowner has no obligation to develop or cause the development of Affordable Units on the RHNA Acreage. However, unless otherwise approved by the City, any development of the that portion of the RHNA Acreage within the Property as, if, and when the same occurs, shall be consistent with RHNA requirements as identified by the Housing Element (in effect as of the date of this AHP), and shall be at a minimum density of 26 dwelling units per acre, subject to the following provisions:

3.1. No Net Loss. California Government Code section 65584 requires all development on RHNA qualifying acres approved by the State through the Housing Element process to yield no less than the minimum acreage used to satisfy State RHNA requirements. In order to contribute to the required RHNA performance, development on the RHNA Acreage must be at or above a density of an average of 26 units per acre, unless the City can make the following findings in writing supported by substantial evidence: (1) the reduction is consistent with the adopted General Plan, including the Housing Element, and (2) the remaining sites identified in the Housing Element are adequate to accommodate the City's share of the regional housing need pursuant to Government Code section 65863. The City will accept an average of 26 units per acre on RHNA Acreage being developed concurrently by the same owner.

3.2. Review of RHNA Acreage. The Parties acknowledge that SACOG will review, from time to time, the RHNA for the City. The SACOG allocation of RHNA units to the City may differ from the amounts anticipated in determining projected RHNA requirements for the RDOSP Area. However, no such future adjustment by SACOG in the allocation of RHNA units to the City shall result in an increase to the RHNA Acreage as described herein. There may be changes in market conditions and demand which result in amendments to policy and statute. In order to be more responsive to future conditions in the RDOSP Area, upon receipt by City of a written request from Landowner for reconsideration of the allocation of RHNA Acreage, the City will consider whether RHNA Acreage is still needed to accommodate the City's regional housing needs pursuant to Government Code section 65584.

4. **Affordable Housing Performance Requirements.** Landowner has no obligation to construct Affordable Units under this AHP, and is not required to reserve or dedicate any land for the construction of affordable housing. However, at the request of City, Landowner has identified locations and acreages of four (4) sites, which may be subdivided to create three-acre parcels in the future (the "Identified Sites"), as shown on Exhibit 4 attached hereto, that may be suitable for the construction of Affordable Units by third parties. Landowner will offer to City for compensation at fair market value (to be determined as set forth below) all or a portion of the Identified Sites as follows:

4.1 Identified Sites for Affordable Units.

4.1.1. Total Acreage. The Identified Sites within the Property will result in 12 acres of HD available for purchase by the City. The Identified Sites are depicted on Exhibit 4.

4.1.2. Timing and Manner of Acquisition. City shall have the option to purchase any three (3) acre parcel within an Identified Site(s) (the "Parcel"). Such option shall

be exercised no earlier than the date of approval of the small lot tentative subdivision map which includes the Identified Site(s), and no later than sixty (60) days after recordation of the final small lot subdivision map which includes the Identified Site. City shall exercise such option by delivering to Landowner a written purchase and sale agreement ("PSA"), executed by City as the buyer, along with a written appraisal of the Parcel substantiating the purchase price as set forth in the PSA. Said appraisal shall include the value of any improvements constructed or to be constructed by Landowner, including but not limited to the value of rough grading and stubbing for natural gas, water, storm drain, sewer, conduit for electrical and fiber, etc.). Landowner shall have ninety (90) days from the date of receipt of the PSA to either accept the offer by executing the PSA as the seller, or to make a written counteroffer to City. In the event City does not exercise its option within sixty (60) days after recordation of the final small lot subdivision map which includes the Identified Site(s), City's option to purchase the Identified Site(s) within the final small lot subdivision map shall terminate.

If Landowner's counteroffer includes a purchase price different from that included in the PSA, Landowner shall include in its counteroffer a second written appraisal substantiating Landowner's proposed purchase price. Landowner and City shall meet and confer, in good faith, to resolve any differences between City's PSA and Landowner's counteroffer. If, within fifteen (15) days after presentation of Landowner's counteroffer to City, the Parties cannot agree on a purchase price and execute a final PSA, City and Landowner shall, within an additional fifteen (15) days, agree on and retain a third appraiser who shall decide the purchase price within thirty (30) days after such appraiser is engaged, with the costs of this determination to be shared equally by the Parties. The purchase price decided by the third appraiser shall not be less than the purchase price set forth in City's proposed PSA, and shall not be more than the purchase price set forth in Landowner's counteroffer.

Any other terms and/or conditions that Landowner's counteroffer modifies or adds from those set forth in City's proposed PSA shall be resolved in good faith between the Parties, it being acknowledged that the material terms of any final PSA are included in this AHP.

Once the purchase price has been resolved in the manner described above, the Parties shall execute the final PSA within fifteen (15) days after receipt of the third appraiser's determination of purchase price. Unless otherwise specified therein, close of escrow shall occur not more than sixty (60) days after full execution of the final PSA.

Landowner shall have the right at any time to present City with a written offer to sell a Parcel to City. City shall have no obligation to accept or reject such offer, or to make a counteroffer, prior to the date which is sixty (60) days after recordation of the final small lot subdivision map which includes the Parcel, provided that City agrees that it will nevertheless consider any such offer in good faith.

4.1.3 Compensation to Landowner. Landowner shall be paid the purchase price either (a) in cash or (b) through the application of credits to any Exactions owed on remaining undeveloped units within the subdivision. In the event Landowner is compensated through credits, City and Landowner will enter into an appropriate agreement memorializing the application of the credits prior to close of escrow.

4.1.4 Obligations of Landowner with Respect to Improvements for Identified Site(s). City acknowledges and agrees that, other than the agreement as to the location of the Identified Site(s), Landowner shall not be required to reserve or dedicate any of the Identified Site(s) to City and Landowner is not required to construct Affordable Units on the

Identified Sites. City further acknowledges and agrees that Landowner has no obligation or requirement to construct frontage improvements to the Identified Site(s), including but not limited to curb, gutter, and sidewalk. If Landowner installs improvements of any kind, the value of the improvements shall be included in the purchase price and either paid for or credited to Landowner as provided in Section 4.1.4.

4.1.5 Construction of Affordable Units on the Identified Site(s). City shall consult with Landowner on the selection of a third party who will construct Affordable Units on the identified Site(s). The design, landscaping, materials, and all other pertinent development standards contained in the Rio del Oro Specific Plan Development Standards and Design Guidelines (and any and all amendments thereto) shall apply to the construction of the Affordable Units.

4.2 Other Options for Meeting Obligations Under the AHP. The Parties acknowledge that as the Property develops and market conditions evolve, new solutions for meeting affordable housing obligations may arise and merit consideration. Pursuant to Section 5.2 below, the Parties may cooperate to amend this AHP to accommodate such additional options.

5. Term, Amendment and Termination.

5.1. Term. This term of this AHP shall extend and be equal to the term of the ARDA, but the requirements applicable to any MRU shall terminate after the payment of the Affordable Housing In Lieu Fee for that MRU, and shall terminate as to the entire Property when all Affordable Housing In Lieu Fees required by this Agreement for the Property have been paid and Landowner has fully complied with the requirements of Section 4.

5.2. Amendment by Mutual Consent. This AHP may be amended in writing from time to time by mutual consent of the City and Landowner.

5.3. Termination. This AHP may be canceled in whole or in part only by mutual consent of the City and Landowner or their successors in interest. Any fees paid pursuant to this AHP and spent by the City prior to the date of cancellation shall be retained by City.

6. Breach. This AHP is implemented as a condition of approval for consistency with the City's Housing Element. Any material violation by Landowner of the requirements under this AHP shall be considered a violation of a condition of approval, and City may invoke remedies appropriate to violation of a condition of approval, including the withholding of building permits until such violation has been cured. The procedures regarding defaults and opportunity to cure set forth in the ARDA (Sections 17, and 17.1 through 17.1.4, inclusive) shall apply to any alleged violation of the terms of this AHP.

7. Severability. If any part of this AHP is for any reason held to be unenforceable, the rest of the AHP remains fully enforceable. If, however, a provision of this AHP is determined to be invalid or unenforceable and the effect is to deprive Landowner of an essential benefit of this AHP, then Landowner will have the option to terminate this entire Agreement upon written notice to City. If City contends that it has been deprived of an essential benefit of this AHP, then City shall notify Landowner and the Parties will meet and confer to evaluate whether the remainder of the Agreement should be valid and enforceable.

8. **Applicable Law**. California law applies to this AHP without regard for any choice-of-law rules that might direct the application of the laws of any other jurisdiction.

9. **Attorneys' Fees and Costs in Legal Actions by Parties to the Agreement**. Should any legal action be brought by either party for breach of this AHP or to enforce any provisions herein related to the performance of the Parties as set forth in this AHP, the prevailing party in the action is entitled to reasonable attorneys' fees, court costs, and any other costs as may be fixed by the Court.

10. **Agreement Runs With The Land**. Except as otherwise provided for in this AHP, all of the provisions, rights, terms, covenants, and obligations contained in this AHP are binding upon the Parties and their respective heirs, successors and assignees, representatives, lessees, and all other persons acquiring the property this AHP applies to, or any portion thereof, or any interest therein, whether by operation of law or in any manner whatsoever. All of the provisions of this AHP are enforceable as equitable servitudes and constitute covenants running with the land pursuant to applicable laws, including, but not limited to, Section 1468 of the California Civil Code. Each covenant to do, or refrain from doing, some act on the property subject to this AHP, or with respect to any owned property: (1) is for the benefit of such properties and is a burden upon such properties; (2) runs with such properties; and (3) is binding upon each party and each successive owner during its ownership of such properties or any portion thereof, and shall be a benefit to and a burden upon each party and its property hereunder and each other person succeeding to an interest in such properties.

11. **Indemnification**. Landowner agrees to indemnify, defend with counsel selected by the City, and hold harmless City, and its elected and appointed councils, boards, commissions, officers, officials, agents, employees, and representatives from any and all claims, costs (including legal fees and costs incurred by the City or awarded to plaintiffs) and liability for any personal injury or property damage which may arise directly or indirectly as a result of any actions or inactions by Landowner, or any actions or inactions of Landowner's contractors, subcontractors, agents, or employees arising out of or related to the obligations of this AHP. Landowner has no indemnification obligation with respect to the negligence or willful misconduct of City, or its elected and appointed councils, boards, commissions, officers, officials, agents, employees, and representatives.

12. **Cooperation In the Event of Legal Challenge to this AHP**. In the event of any legal or equitable action or other proceeding instituted by any third party challenging the validity of any provisions of this AHP:

12.1. The City and Landowner agree to cooperate in defending against the action or proceeding.

12.2. Landowner is solely responsible for its own costs and any costs incurred by the City for such defense.

12.3. Neither Landowner nor the City shall settle any action or proceeding on grounds that include non-monetary relief or admissions of liability without written consent of the other party. City agrees not to settle any action based upon monetary relief without the written consent of Landowner, unless City is solely liable and agrees to pay such monetary relief.

13. **Third Party Beneficiaries**. This AHP is made and entered into for the sole protection and benefit of Landowner and City and their successors and assigns. No other person shall have any right of action based upon any provision in this AHP.

14. **Notices**. All notices and other communications required or permitted under this AHP must be in writing and must be delivered in person or sent by certified mail, postage prepaid, or sent by facsimile or electronic mail.

Notice required to be given to City shall be addressed as follows:

CITY OF RANCHO CORDOVA

Community Development Director

2729 Prospect Park Drive

Rancho Cordova, CA 95670

Fax: (916) 851-8762

E-mail: abusch@cityofranchocordova.org

Notice required to be given to Landowner shall be addressed as follows:

Elliott Homes, Inc.

Attn.: Harry C. Elliott III, President

340 Palladio Parkway, Suite 521

Folsom, CA 95630

Fax : (916) 984-1322

E-mail: HCEIII@ElliottHomes.com

Either party may change the address stated herein by giving notice in writing to the other party and, thereafter, notices shall be addressed and transmitted to the new address.

15. **Assignment and Release**. From and after recordation of this AHP against the Property, Landowner shall have the full right to assign this AHP as to the Property, or any portion thereof, in connection with any sale, transfer or conveyance thereof, provided that: (1) Landowner will pay City any and all fees or amounts due to City, as set forth in Section 2 of this AHP, and (2) upon the receipt by the City Community Development Director of the express written assignment by Landowner and assumption by the assignee of such assignment in the form approved by the City. Upon the payment of such fees or amounts due (which shall be acknowledged on the assignment by the City Community Development Director upon the request of Landowner) and the City's receipt of the express written assignment by Landowner, the assumption by the assignee of such assignment, and the conveyance of Landowner's interest in the Property related thereto, Landowner shall be released from further liability or obligation related to the portion of the property so conveyed and the assignee will be considered the "Landowner," with all rights and obligations related thereto, with respect to such conveyed property.

16. **Form Of Agreement; Recordation; Exhibits**. City will record this AHP, and any subsequent amendment to this AHP, against the Property with the County Recorder within thirty

(30) days of the effective date. City will also record any termination of any parts or provisions of this AHP. Any amendment or termination of this AHP that affects less than all of the Property must describe the portion of the property that is the subject of the amendment or termination. This AHP is executed in two (2) duplicate originals, each of which is deemed to be an original. This AHP consists of 12 pages and 4 exhibits, which constitute the entire understanding and agreement of the Parties with respect to the AHP and obligations related thereto.

17. **Recitals.** The Recitals set forth above are an integral part of this Agreement and shall have the same contractual and legal significance as any other language in this Agreement.

IN WITNESS WHEREOF, the City of Rancho Cordova, a municipal corporation, has authorized the execution of this AHP in duplicate by its City Manager and attested to by its City Clerk under the authority of Resolution No.107-2016, adopted by the Council of the City on this19th day of September 2016, and Landowner has caused this AHP to be executed.

"CITY"

CITY OF RANCHO CORDOVA,
a municipal corporation

By: _____
Name: Cyrus Abhar
Its: City Manager

Date: 2/2, 2017

ATTEST:

_____
City Clerk

APPROVED AS TO FORM:

_____
Adam U. Lindgren
City Attorney

Date: 1/31, 2017

"LANDOWNER"

ELLIOTT HOMES, INC.,
an Arizona corporation

By: _____
Name: Harry C. Elliott III
Title: President

Date: Nov. 28, 2016

ATTACHMENT 1

A notary public or other officer completing this certificate verifies only the identity of the individual who signed the document to which this certificate is attached, and not the truthfulness, accuracy, or validity of that document

STATE OF CALIFORNIA)
)
COUNTY OF SACRAMENTO)

On 2-2-2017 before me, Mindy Cuppy, a Notary Public, personally appeared Cyrus Abhar, who proved to me on the basis of satisfactory evidence to be the person~~(s)~~ whose name~~(s)~~ is/~~are~~ subscribed to the within instrument, and acknowledged to me that he/~~she/they~~ executed the same in his/~~her/their~~ authorized capacity~~(ies)~~, and that by his/~~her/their~~ signature~~(s)~~ on the instrument the person~~(s)~~, or the entity upon behalf of which the person~~(s)~~ acted, executed the instrument.

I certify under PENALTY OF PERJURY under the laws of the State of California that the foregoing paragraph is true and correct.

WITNESS my hand and official seal.

MINDY CUPPY
Commission # 2038949
Notary Public - California
Sacramento County
My Comm. Expires Aug 26, 2017

Mindy Cuppy, Notary Public

CALIFORNIA ALL-PURPOSE ACKNOWLEDGMENT **CIVIL CODE § 1189**

A notary public or other officer completing this certificate verifies only the identity of the individual who signed the document to which this certificate is attached, and not the truthfulness, accuracy, or validity of that document.

State of California)
County of Sacramento)

On November 28, 2016 before me, Susan R Stephens, Notary Public,
Date *Here Insert Name and Title of the Officer*

personally appeared Harry C Elliott, III
Name(s) of Signer(s)

who proved to me on the basis of satisfactory evidence to be the person~~(s)~~ whose name~~(s)~~ is~~/are~~ subscribed to the within instrument and acknowledged to me that he~~/she/they~~ executed the same in his~~/her/their~~ authorized capacity~~(ies)~~, and that by his~~/her/their~~ signature~~(s)~~ on the instrument the person~~(s)~~, or the entity upon behalf of which the person~~(s)~~ acted, executed the instrument.

I certify under PENALTY OF PERJURY under the laws of the State of California that the foregoing paragraph is true and correct.

WITNESS my hand and official seal.

SUSAN R. STEPHENS
COMM. #2045366
Notary Public-California
SACRAMENTO COUNTY
My Comm. Exp. OCT. 14, 2017

Signature Susan R Stephens
Signature of Notary Public

Place Notary Seal Above

OPTIONAL

Though this section is optional, completing this information can deter alteration of the document or fraudulent reattachment of this form to an unintended document.

Description of Attached Document

Title or Type of Document: Affordable Housing Plan Agreement - Rio Del Oro Document Date: November 28, 2016
Number of Pages: _____ Signer(s) Other Than Named Above: _____

Capacity(ies) Claimed by Signer(s)

Signer's Name: _____
☐ Corporate Officer — Title(s): _____
☐ Partner — ☐ Limited ☐ General
☐ Individual ☐ Attorney in Fact
☐ Trustee ☐ Guardian or Conservator
☐ Other: _____
Signer Is Representing: _____

Signer's Name: _____
☐ Corporate Officer — Title(s): _____
☐ Partner — ☐ Limited ☐ General
☐ Individual ☐ Attorney in Fact
☐ Trustee ☐ Guardian or Conservator
☐ Other: _____
Signer Is Representing: _____

©2014 National Notary Association • www.NationalNotary.org • 1-800-US NOTARY (1-800-876-6827) Item #5907

EXHIBIT LIST

Exhibit 1:	Landowner's Property – Legal Description
Exhibit 2:	Landowner's Property – Map
Exhibit 3:	RHNA Acreage
Exhibit 4:	Identified Sites

2698810.3

EXHIBIT 1
LANDOWNER'S PROPERTY - LEGAL DESCRIPTION

Parcel 2:
All that portion of Parcel 15, as shown on that certain Parcel Map filed March 4, 1980 in Book 55 of Parcel Maps, Page 29, Sacramento County Records, more particularly described as follows:

Tank Site No. 804:
Beginning at a point located within said Parcel 15 from which the Southwest corner of said Parcel 15 bears the following three (3) courses and distances: (1) South 00°53'20" West 2759.57 feet, (2) North 89°06'40" West 1070.18 feet, and (3) North 89°10'03" West 990.37 feet; thence from said point of beginning South 18°45'03" West 276.75 feet; thence North 71°14'57" West 146.50 feet; thence North 18°45'03" East 276.75 feet; thence South 71°14'57" East 146.50 feet to the point of beginning.

Also being described in Parcel C of that certain Lot Line Adjustment, Resolution No. 90-BLR-1632 recorded February 15, 1991 in Book 910215 page 1046, Official Records.

APN: 072-0370-046

Together with the right of ingress and egress upon, over and across an existing road 20 feet in width, the centerline of which is described as follows:

Beginning at a point located South 18°45'03" West 10.53 feet from the Northeast corner of the before described parcel of land; thence from said point of beginning South 89°25'42" East 51.48 feet; thence South 00°34'18" West 2749.88 feet to a point located on the Southerly boundary line of said Parcel 15.

Parcel 3:
All that portion of Parcel 15, as shown on that certain Parcel Map filed March 4, 1980 in Book 55 of Parcel Maps, Page 29, Sacramento County Records, more particularly described as follows:

Beta Area Well Site "A"- 805:
Beginning at a point located within said Parcel 15 from which the Southwest corner of said Parcel 15 bears the following three (3) courses and distances: (1) South 00°53' 20" West 2611.85 feet, (2) North 89°06'40" West 1119.19 feet, and (3) North 89°10'03" West 990.37 feet; thence from said point of beginning South 00°34'18" West 80.00 feet; thence North 89°25'42" West 70.00 feet; thence North 00°34'18" East 80.00 feet; thence South 89°25'42" East 70.00 feet to the point of beginning.

Also being described in Parcel D of that certain Lot Line Adjustment, Resolution No. 90-BLR-1632 recorded February 15, 1991 in Book 910215 Page 1046, Official Records.

APN: 072-0370-047

Together with the right of ingress and egress upon, over and across an existing road 20 feet in width, the centerline of which is described as follows:

Beginning at the Southeast corner of the before described parcel of land; thence from said point of beginning South 00°34'18" West 2531.88 feet to a point located on the Southerly boundary line of Parcel 15.

Parcel 4:
All that portion of Parcel 15, as shown on that certain Parcel Map filed March 4, 1980 in Book 55 of Parcel Maps, Page 29, Sacramento County Records, more particularly described as follows:

Beta Area Well Site "B"- 806:
Beginning at a point located within said Parcel 15 from which the Southwest corner of Parcel 15 bears the following three (3) courses and distances: (1) South 00°53'20" West 1156.48 feet, (2) North 89°06'40" West 1127.25 feet, and (3) North 89°10'03" West 990.37 feet; thence from said point of beginning South 00°34'18" West 80.00 feet; thence North 89°25'42" West 78.00 feet; thence North 00°34'18" East 80.00 feet; thence South 89°25'42" East 78.00 feet to the point of beginning.

Also being described in Parcel E of that certain Lot Line Adjustment, Resolution No. 90-BLR-1632 recorded February 15, 1991 in Book 910215 Page 1046, Official Records.

APN: 072-0370-048

Parcel 5:
All that portion of Parcel 15 as said Parcel is shown on that certain Revised Parcel Map of "A Portion of Record of Surveys 12 R.S. 30 and 18 R.S. 4 and also being a Portion of Rancho Rio Del Los Americanos" filed in the office of the Recorder, County of Sacramento, State of California in Book 55 of Parcel Maps, Page 29, and being more particularly described as follows:

Beginning at the Northwest corner of said Parcel 15; thence from said point of beginning along the Westerly line of said Parcel the following five (5) courses: (1) South 07°44'05" West 30.44 feet, (2) South 06°'36'05" East 3603.85 feet, (3) South 08°08'17" East 2073.42 feet, (4) South 08°47'03" East 2197.91 feet, and (5) South 08°48'24" East 419.75 feet to a point on the Westerly right-of-way line of Sunrise Boulevard, a County Road, as shown on said Parcel Map; thence along said right-of-way line South 39°18'38" East 4093.39 feet; thence South 89°10'03" East 990.37 feet; thence South 89°06'40" East 933.19 feet; thence North 00°53'20" East 2290.81 feet to a point on an existing fence line; thence along said fence line, the following fourteen (14) courses and distances: (1) North 89°32'35" West 367.46 feet, (2) North 89°24'25" West 402.97 feet; (3) North 00°30'05" East 722.15 feet, (4) North 00°34'11" East 608.94 feet, (5) North 87°30'22" West 39.63 feet, (6) North 00°50'49" East 225.19 feet, (7) North 71°'12'32" West 459.31 feet, (8) North 18°32'48" East 299.22 feet, (9) North 18°'43'33" East 581.68 feet, (10) North 18'°52'10" East 260.18 feet, (11) North 87°29'23" East 30.58 feet, (12) North 86°35"54" East 79.74 feet, (13) North 87°23'08" East 104.15 feet, and (14) South 71°22'21" East 494.50 feet; thence North 00°53'20" East 4230.53 feet; thence North 90°00'00" West 1078.83 feet; thence North 04°03'36' West 192.34 feet; thence North 15°38'51" West 253.09 feet; thence North 10°48'50" West 497.39 feet; thence North 06°52'34" West 292.93 feet; thence North 05°51'41" West 169.64 feet; thence North 00°52'23" West 152.03 feet; thence North 72°06'34" East 146.02 feet; thence North 74°39'41" East 462.88 feet; thence North 85°19'48" East 66.67 feet; thence North 11°27'56" East 102.96 feet; thence North 03°39'36" West 197.73 feet; thence North 02°17'57" East 318.01 feet; thence North 01°'15'08" East 494.52 feet; thence South 84°44'15" West 1242.18 feet; thence curving to the right on an arc having a radius of 3000.00 feet, said arc being subtended by a chord bearing South 88°53'53" West 435.31 feet; thence North 86°56'29" West 389.84 feet; thence curving to the left on an arc

having a radius of 1500.00 feet, said arc being subtended by a chord bearing South 87°03'12" West 313.85 feet, thence South 81°02'54" West 2579.08 feet to the point of beginning.

Excepting therefrom as a mineral interest, and not as a royalty interest, all of the minerals of every kind in, under, or that may be produced from the Real Property as reserved by Aerojet-General Corporation, an Ohio corporation in deed recorded November 18, 1997, in Book 971118, Page 810, Official Records; and excepting as a mineral interest, and not as a royalty interest, all oil, gas, hydrocarbons, and associated substances in, under, or produced and saved from the Real Property as reserved by Aerojet-General Corporation, an Ohio corporation in deed recorded November 18,1997, in Book 971118, Page 810, Official Records; and excepting all water and rights, including, but not limited to all rights of access, to water lying below the surface of the Real Property as reserved by Aerojet-General Corporation, an Ohio corporation in deed recorded November 18, 1997, in Book 971118, Page 810, Official Records; provided, however, that Grantor, and its successors and assigns, shall not have the right for any purpose whatsoever to enter upon, into, or through the surface of the Real Property, or within one hundred (100) feet below, as measured vertically from, the surface of the Real Property.

Said land is also described in Lot 'A' of that certain Lot Line Adjustment Resolution No. 97 -BLS-0637 recorded November 18, 1997 in Book 971118 Page 807, Official Records.

APN: 072-0370-071

Parcel Six:
All that portion of Parcel 15 as said parcel is shown in Book 55 of Parcel Maps at Page 29 the Official Records of Sacramento County, being in the City of Rancho Cordova, County of Sacramento, State of California, and more particularly described as follows:

Beginning at the southerly most common corner of the property described in Book 20011130 at Page 1431 and Book 20080221 at Page 779 in the Official Records of Sacramento County, said point also being the southerly most common corner between Lot A and Lot B per the Lot Line Adjustment, Resolution No. 97 -BLS-0637 as recorded in Book 19971118 at Page 807 in the Official Records of Sacramento County; Thence, from the Point of Beginning, North 00°22'20" East, a distance of 2290.81 feet along the common line between said properties;
Thence, South 89°56'25" West, a distance of 367.46 feet along said common line;
Thence, North 89°55'25" West, a distance of 402.97 feet along said common line;
Thence, North 00°00'55" West, a distance of 722.15 feet along said common line;
Thence, North 00°03'11" East, a distance of 608.94 feet along said common line;
Thence, North 88°01 '22" West, a distance of 39.63 feet along said common line;
Thence, North 00°19'49" East, a distance of 225.19 feet along said common line;
Thence, North 71°43'32" West, a distance of 459.31 feet along said common line;
Thence, North 18°01 '48" East, a distance of 299.22 feet along said common line;
Thence, North 18°12'33" East, a distance of 581.68 feet along said common line;
Thence, North 18°21'10" East, a distance of 260.18 feet along said common line;
Thence, North 86°58'23" East, a distance of 30.58 feet along said common line;
Thence, North 86°04'54" East, a distance of 79.74 feet along said common line;
Thence, North 86°52'08" East, a distance of 104.15 feet along said common line;
Thence, South 71°53'21" East, a distance of 494.50 feet along said common line;
Thence, North 00°22'20" East, a distance of 1401.37 feet along said common line;
Thence, South 51°45'32" East, a distance of 723.29 feet;
Thence, North 27°42'33" East, a distance of 850.47 feet;
Thence, North 38°10'20" East, a distance of 125.00 feet;
Thence, South 51°49'40" East, a distance of 453.85 feet;

Thence, on the arc of a curve to the right a distance of 498.28 feet, said curve has a central angle of 25°22'37" and a radius of 1125.00 feet;
Thence, on the arc of a curve to the left a distance of 784.77 feet, said curve has a central angle of 46°07'00" and a radius of 975.00 feet;
Thence, South 72°34'03" East, a distance of 651.82 feet;
Thence, South 17°25'57" West, a distance of 25.00 feet;
Thence, South 72°34'03" East, a distance of 856.47 feet;
Thence, South 17°25'57" West, a distance of 1542.41 feet to the arc of a non-tangent curve having a radial bearing of South 42°47'17" West;
Thence, on the arc of said non-tangent curve to the right a distance of 665.31 feet, said curve has a central angle of 19°03'35" and a radius of 2000.00 feet;
Thence, South 28°09'08" East, a distance of 236.87 feet;
Thence, North 79°02'16" West, a distance of 274.71 feet;
Thence, on the arc of a curve to the left a distance of 1060.28 feet, said curve has a central angle of 108°28'52" and a radius of 560.00 feet;
Thence, on the arc of a curve to the right a distance of 555.35 feet, said curve has a central angle of 58°55'26" and a radius of 540.00 feet;
Thence, on the arc of a curve to the left a distance of 550.67 feet, said curve has a central angle of 50°28'53" and a radius of 625.00 feet;
Thence, South 89°31'57" West, a distance of 682.58 feet to the arc of a non-tangent curve having a radial bearing of South 89°24'23" West;
Thence, on the arc of said non-tangent curve to the right a distance of 135.81 feet, said curve has a central angle of 47°26'53" and a radius of 164.00 feet;
Thence, on the arc of a curve to right a distance of 269.45 feet, said curve has a central angle of 27°49'00" and a radius of 555.00 feet;
Thence, on the arc of a curve to the left a distance of 567.31 feet, said curve has a central angle of 08°53'18" and a radius of 3657.00 feet;
Thence, on the arc of a curve to the left a distance of 614.63 feet, said curve has a central angle of 66°04'15" and a radius of 533.00 feet;
Thence, South 00°17'18" East, a distance of 423.57 feet to the south line of said Parcel15;
Thence, North 89°37'40" West, a distance of 418.60 feet along said south line to the Point of Beginning.

Excepting therefrom the following described parcels of land:

Exception A
All that property described as "Beta Area Well Site 'B'-806" in Book 820917 at Page 1513 in the Official Records of Sacramento County, being in the City of Rancho Cordova, County of Sacramento, State of California, and more particularly described as follows:

Commencing at the southerly most common corner of the property described in Book 20011130 at Page 1431 and Book 20080221 at Page 779 in the Official Records of Sacramento County, said point also being the southerly most common corner between Lot A and Lot B per the Lot Line Adjustment, Resolution No. 97 -BLS-0637 as recorded in Book 19971118 at Page 807 in the Official Records of Sacramento County; Thence, from the Point of Commencement, North 00°22'20" East, a distance of 1075.90 feet along the common line between said properties;
Thence, South 89°37'45" East, a distance of 120.05 feet to the Point of Beginning;
Thence, from the Point of Beginning, North 00°02'10" West, a distance of 79.89 feet;
Thence, South 89°58'18" East, a distance of 78.00 feet;
Thence, South 00°00'36" West, a distance of 79.95 feet;
Thence, North 89°55'38" West, a distance of 77.93 feet to the Point of Beginning.

Exception B
All that property described as "Tank Site No. 804" in Book 820917 at Page 1513 in the Official Records of Sacramento County, being in the City of Rancho Cordova, County of Sacramento, State of California, and more particularly described as follows:

Commencing at the southerly most common corner of the property described in Book 20011130 at Page 1431 and Book 20080221 at Page 779 in the Official Records of Sacramento County, said point also being the southerly most common corner between Lot A and Lot B per the Lot Line Adjustment, Resolution No. 97 -BLS-0637 as recorded in Book 19971118 at Page 807 in the Official Records of Sacramento County; Thence, from the Point of Commencement, North 00'22'20" East, a distance of 2290.81 feet along the common line between said properties;
Thence, North 18'24'30" West, a distance of 263.84 feet to the Point of Beginning;
Thence, from the Point of Beginning, North 18'10'05" East, a distance of 276.73 feet;
Thence, South 71°48'29" East, a distance of 146.44 feet;
Thence, South 18°10'43" West, a distance of 276.46 feet;
Thence, North 71°55'01" West, a distance of 146.39 feet to the Point of Beginning.

Exception C
All that property described as "Beta Area Well Site 'A'-805" in Book 820917 at Page 1513 in the Official Records of Sacramento County, being in the City of Rancho Cordova, County of Sacramento, State of California, and more particularly described as follows:

Commencing at the southerly most common corner of the property described in Book 20011130 at Page 1431 and Book 20080221 at Page 779 in the Official Records of Sacramento County, said point also being the southerly most common corner between Lot A and Lot B per the Lot Line Adjustment, Resolution No. 97 -BLS-0637 as recorded in Book 19971118 at Page 807 in the Official Records of Sacramento County; Thence, from the Point of Commencement, North 00°22'20" East, a distance of 2290.81 feet along the common line between said properties;
Thence, North 26°40'21" East, a distance of 268.14 feet to the Point of Beginning;
Thence, from the Point of Beginning, North 00'02'08" East, a distance of 79.98 feet;
Thence, North 89°57'06" East, a distance of 70.00 feet;
Thence, South 00°00'09" East, a distance of 80.01 feet;
Thence, South 89°58'15" West, a distance of 70.05 feet to the Point of Beginning.

APN: 072-0370-102

END OF DESCRIPTION

PREPARED BY WOOD RODGERS, INC.
SACRAMENTO, CALIFORNIA

8/23/14

EXHIBIT 2: LANDOWNER'S PROPERTY - MAP

RIO DEL ORO

CITY OF RANCHO CORDOVA, CALIFORNIA

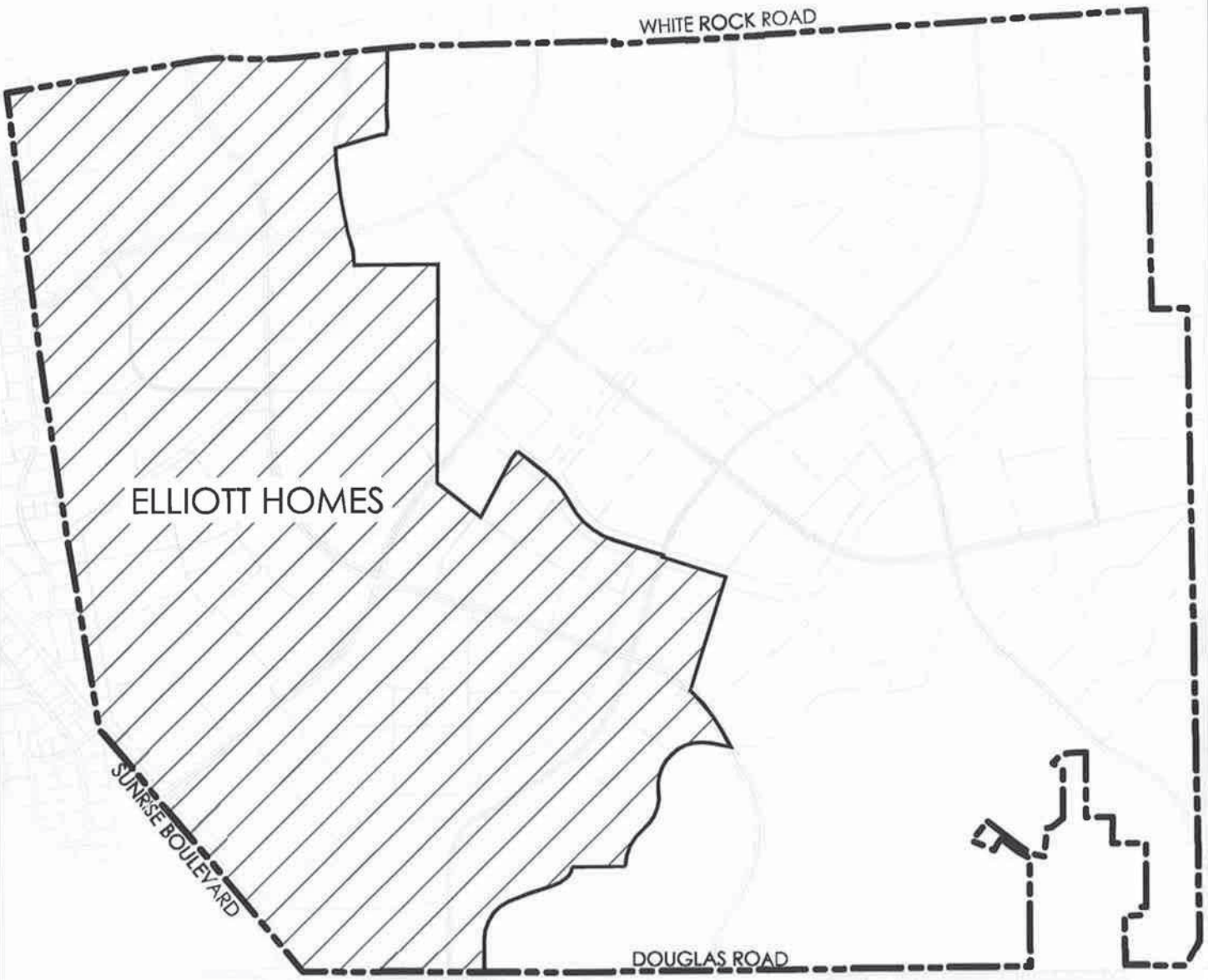

LEGEND

RIO DEL ORO PROJECT BOUNDARY

ELLIOTT HOMES PROPERTY

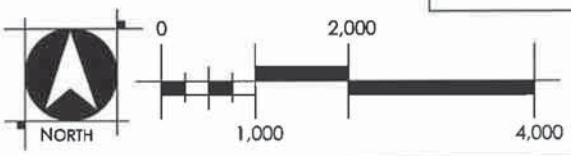

WOOD RODGERS
DEVELOPING INNOVATIVE DESIGN SOLUTIONS
3301 C St, Bldg. 100-B
Sacramento, CA 95816
Tel 916.341.7760
Fax 916.341.7767

ATTACHMENT 1

EXHIBIT 3: RHNA ACREAGE

RIO DEL ORO

CITY OF RANCHO CORDOVA, CALIFORNIA

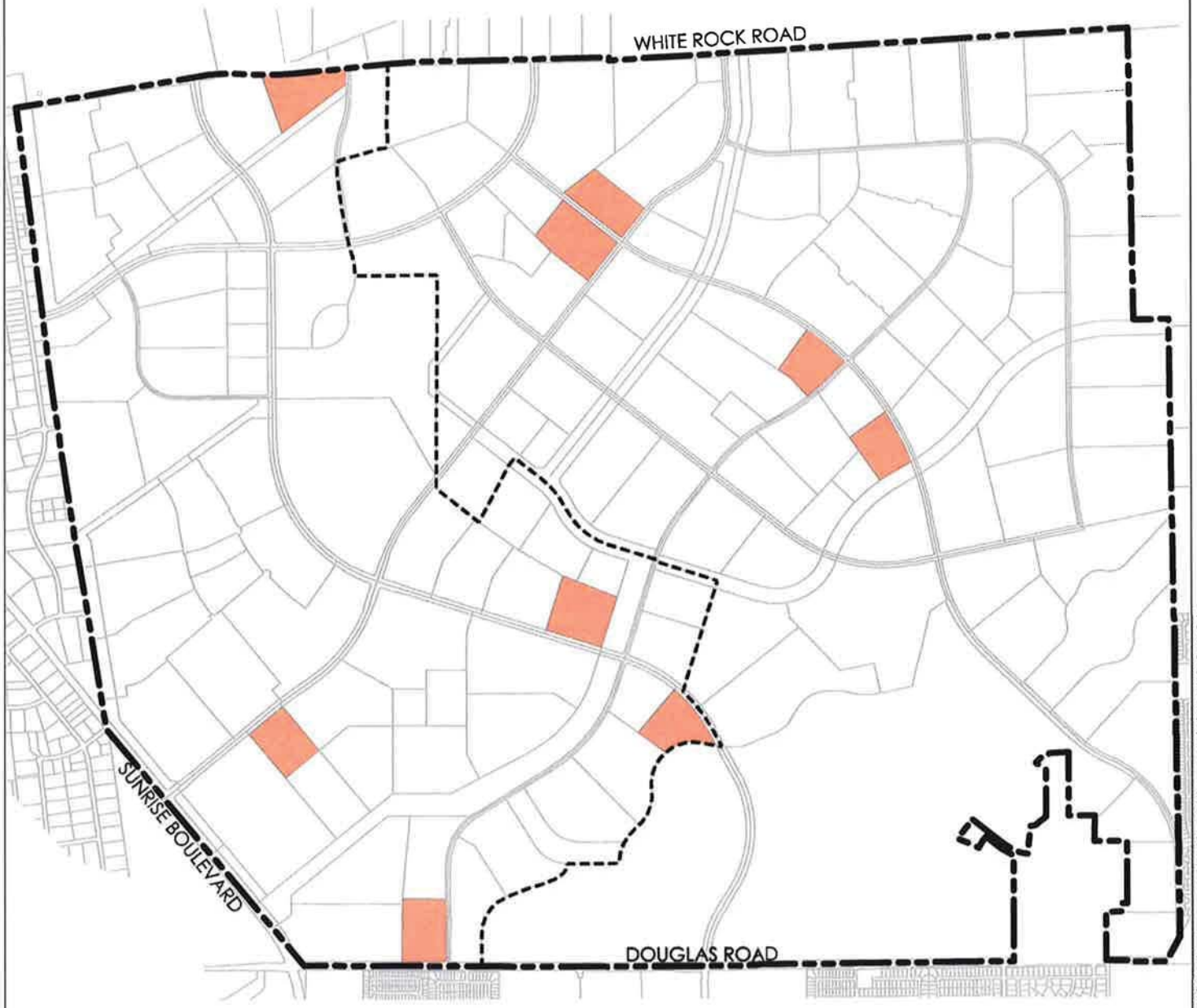

LEGEND

RIO DEL ORO PROJECT BOUNDARY

RHNA ACREAGE

NORTH

0 1,000 2,000 4,000

WOOD RODGERS
DEVELOPING INNOVATIVE DESIGN SOLUTIONS
3301 C St, Bldg. 100-B Tel 916.341.7760
Sacramento, CA 95816

EXHIBIT 4: IDENTIFIED SITES (ELLIOTT HOMES)

RIO DEL ORO

CITY OF RANCHO CORDOVA, CALIFORNIA

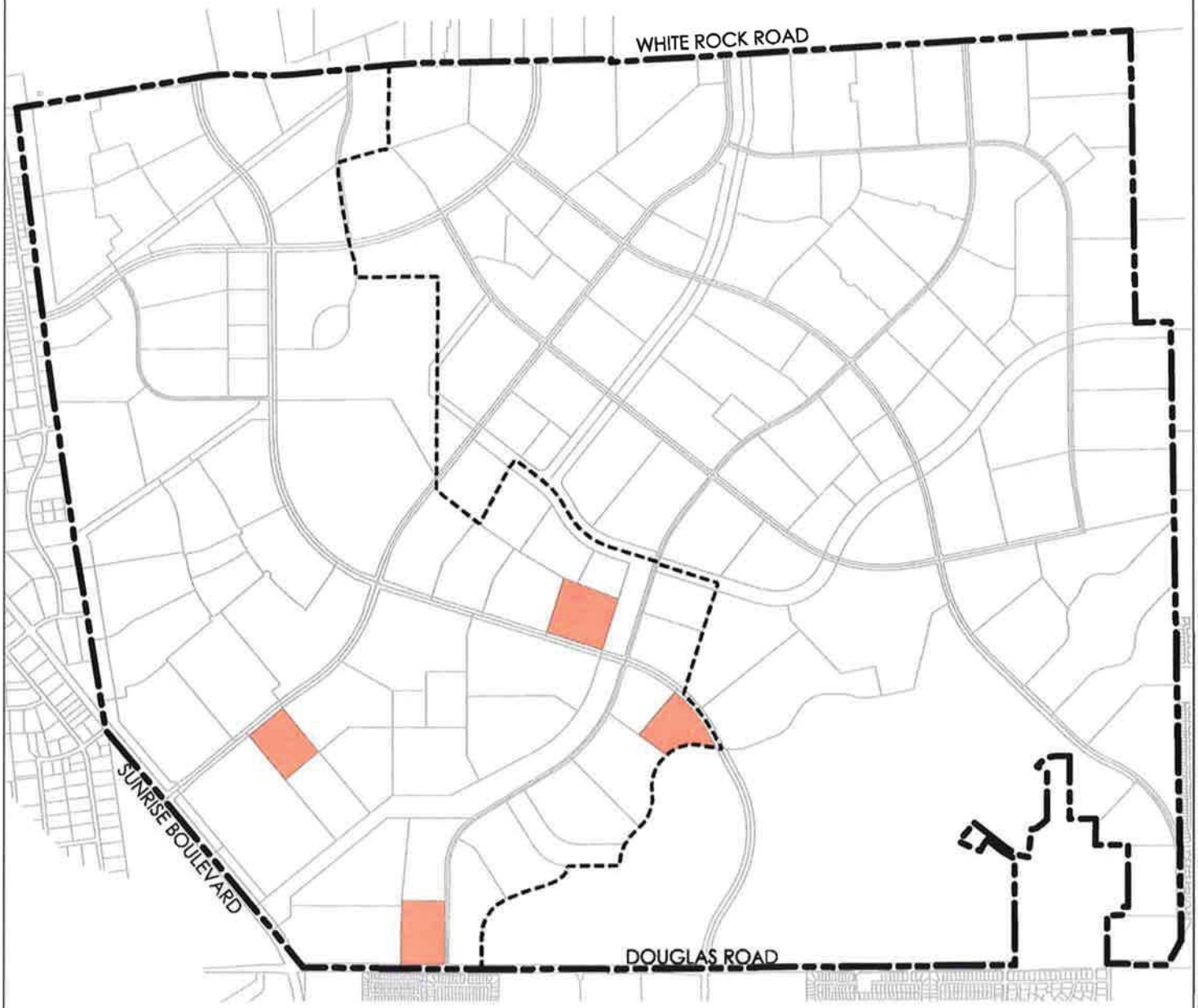

LEGEND

RIO DEL ORO PROJECT BOUNDARY

IDENTIFIED SITES

NORTH

0 1,000 2,000 4,000

WOOD RODGERS
DEVELOPING INNOVATIVE DESIGN SOLUTIONS
3301 C St, Bldg. 100-B
Sacramento, CA 95816
Tel 916.341.7760
Fax 916.341.7767

MEMORANDUM

DATE: October 7, 2019

TO: Honorable Mayor and Council Members

FROM: June Cowles, Senior Planner

SUBJECT: **T-MOBILE ANTENNA ADDITION CONDITIONAL USE PERMIT AMENDMENT; PROJECT NO. DD9881 – LOCATED AT 10653 COLOMA ROAD**

PROPERTY OWNER:	**APPLICANT/DEVELOPER:**
Song Family Revocable Trust 10669 Coloma Road Rancho Cordova, CA 95670	T-Mobile 1 Park Place, Suite #300 Dublin, CA 94568 Global Signal Acquisition PO Box 277455 Atlanta, GA 30384

PROJECT:	The applicant is requesting a Conditional Use Permit Amendment for the following; • Extend height by 10 feet of an existing pole from 60 feet to 70 feet • Install nine new antennas. Antennas will extend five feet beyond the proposed monopole height for an overall increase height of 15 feet. • Install six new Remote Radio Head (RRH) antennas. • Addition of 310 square feet of ground area for corresponding ground equipment within a wall area.
FILE:	DD9881
LOCATION:	10653 Coloma Road
APN:	056-0222-021-0000
PLANNER:	June Cowles, Senior Planner

RECOMMENDATION

Determine the project is Categorically Exempt per Section 15303 (new construction or conversion of small structures) of the California Environmental Quality Act (CEQA) Guidelines; and adopt the Resolution.

RESULT OF RECOMMENDED ACTION

Adoption of the Resolution would approve a Conditional Use Permit Amendment to increase the height of an existing telecommunications pole by 10 feet with a five foot antenna extension for an overall height increase of 15 feet, installation of additional antennas, and an increase of the ground area by 310 square feet for corresponding ground equipment. Approval would allow the

applicant to pursue necessary building permits for construction. The telecommunication facility will provide increased T-Mobile service.

BACKGROUND

The existing cell tower pole is located behind the shopping center buildings on the northeast corner of Coloma Road and McGregor Drive. The existing monopole is approximately 100 feet from the adjacent residential zoned property line. **Figure 1: General Site Location and Figure 2: Site Location**. Sacramento County Planning Commission approved the following;

June 2002: Conditional Use Permit to construct and operate a wireless telecommunications facility (65-foot high monopole tower),three panel antennas, and up to six equipment cabinets. A variance was also approved to permit the use within 100 feet of a residence and within 25 feet of an interior property boundary.

November 2002: Conditional Use Permit to install six additional cellular antennas.

Figure 1: General Site Location

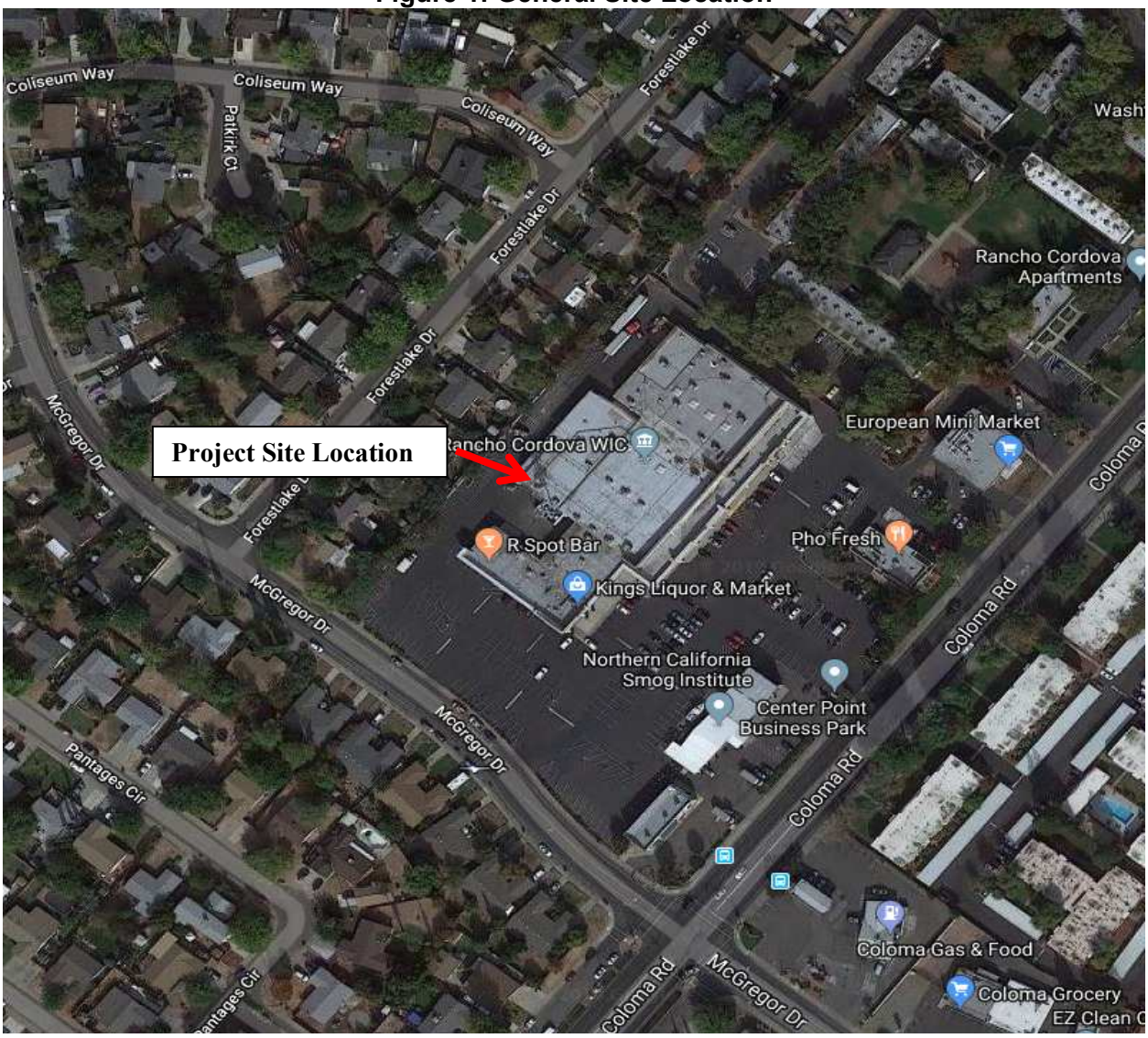

Figure 2: Site Location

PROJECT DESCRIPTION

The applicant, T-Mobile, is requesting a Conditional Use Permit Amendment (CUP) for the following;

- Extend height by 10 feet of existing pole from 60 feet to 70 feet
- Install nine new antennas. Antennas will extend five feet beyond the proposed monopole height for an overall increase height of 15 feet.
- Install six new Remote Radio Head (RRH) antennas.
- Addition of 310 square feet of ground area for corresponding ground equipment within a wall area.

The applicant proposes that the addition of the telecommunications facility would significantly increase coverage for T-Mobile customers within the Rancho Cordova area.

Figure 3: Proposed Site Plan and Elevation

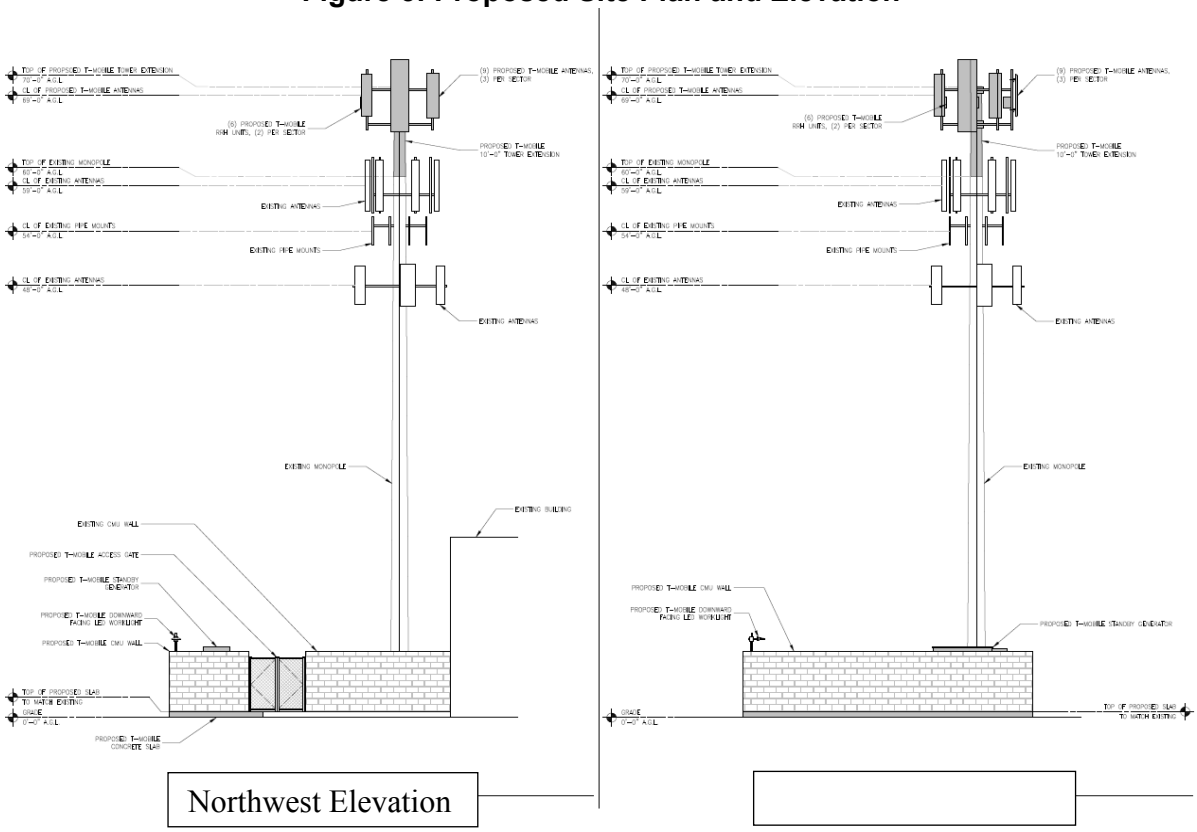

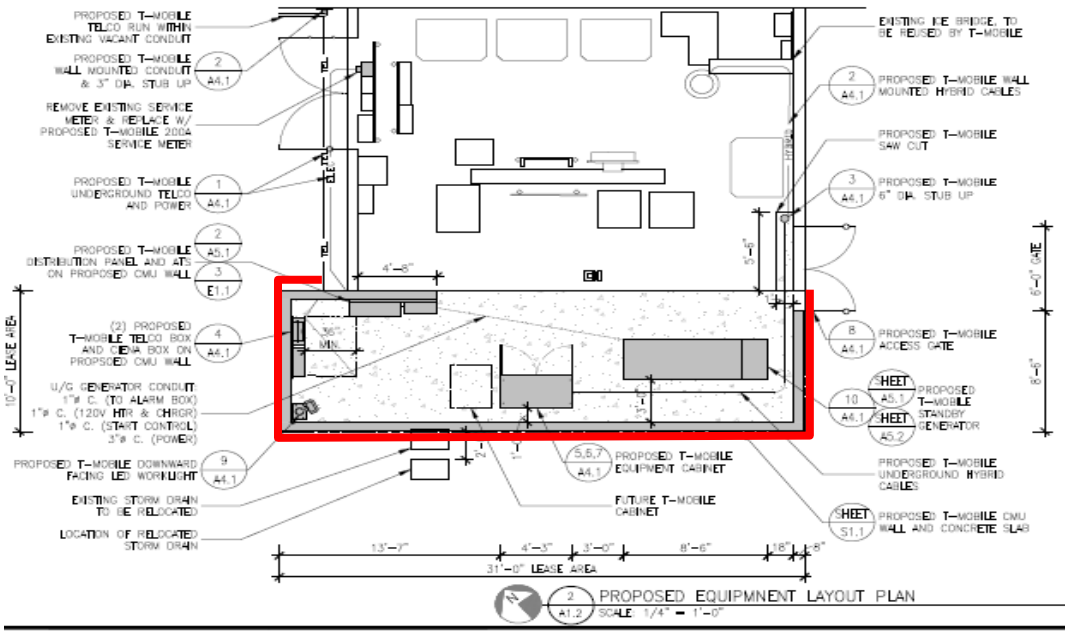

ANALYSIS

REQUIRED PERMITS AND REGULATORY BASIS

Per the City of Ranch Cordova Zoning Ordinance 23.907.020 (B)(2). *Telecommunications facilities, a use permit is required for any collocation that increases the overall height of an existing tower in order to add antennas.*

As stated earlier, a Conditional Use Permit was approved by Sacramento County. Therefore, a Conditional Use Permit amendment is required for the requested additional height. The following **Figures 4, 5, 6, and 7 Existing and Proposed Views,** show views from several locations. In addition**, Figure 7: Existing and Proposed View of Antennas,** show the top of the monopole.

Figure 4: Existing and Proposed Views from McGregor Drive

Figure 5: Existing and Proposed View from Coloma Road

Figure 6: Existing and Proposed View from Forestlake Drive

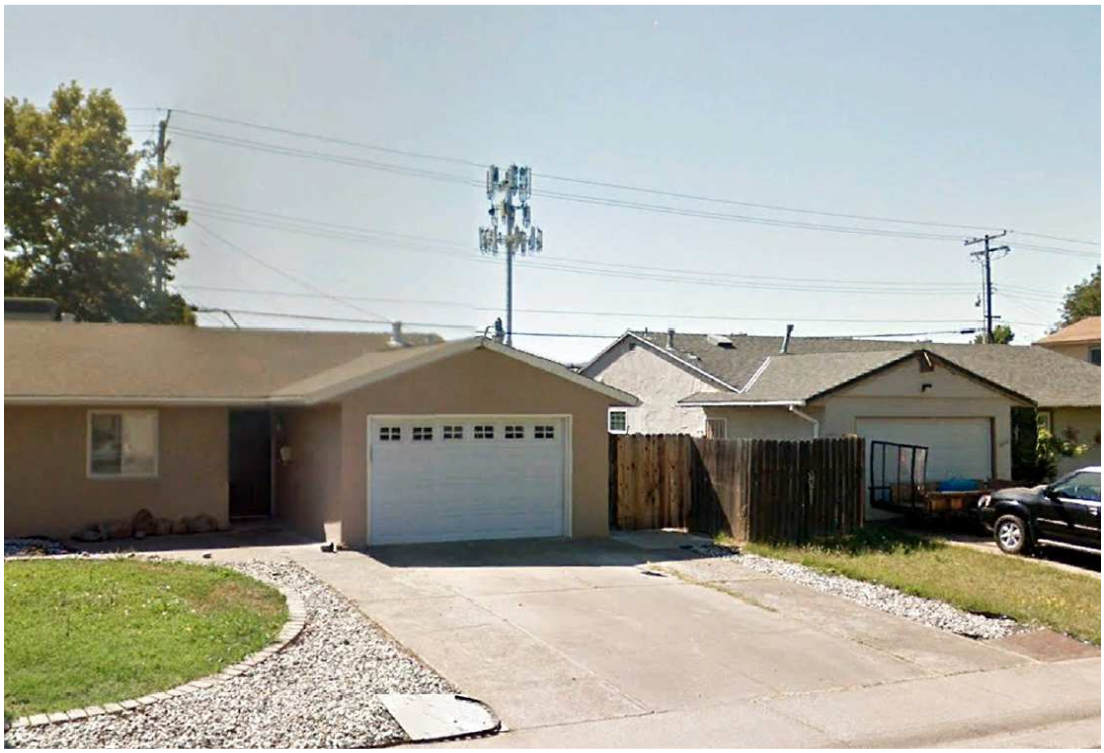

Figure 7: Existing and Proposed View of Antennas

Zoning District

The project site is located within the Village Commercial Mixed-Use Zone (VCMU) which has a maximum height allowance of 45 feet. The Applicant is requesting to exceed the allowed height maximum by 30 feet in order to achieve the 75 feet overall height necessary for the cellular coverage in the area. The Applicant has provided coverage area maps showing the existing coverage/no antennas for the tower and coverage map for the projected coverage for a tower of 75 feet overall height. The taller tower is necessary to meet the applicant's coverage goals for the Rancho Cordova area. **See Figure 8: Coverage Maps**. The applicant states that if the antennas were affixed at a lower level, below the existing antennas at approximately 35 feet, that the service would not improve within the area.

<u>Light Green Pixel: Little or no Signal Coverage</u>
<u>Dark Green Pixel: Strong Signal Coverage</u>

Figure 8: Coverage Maps

Existing, No Antennas:

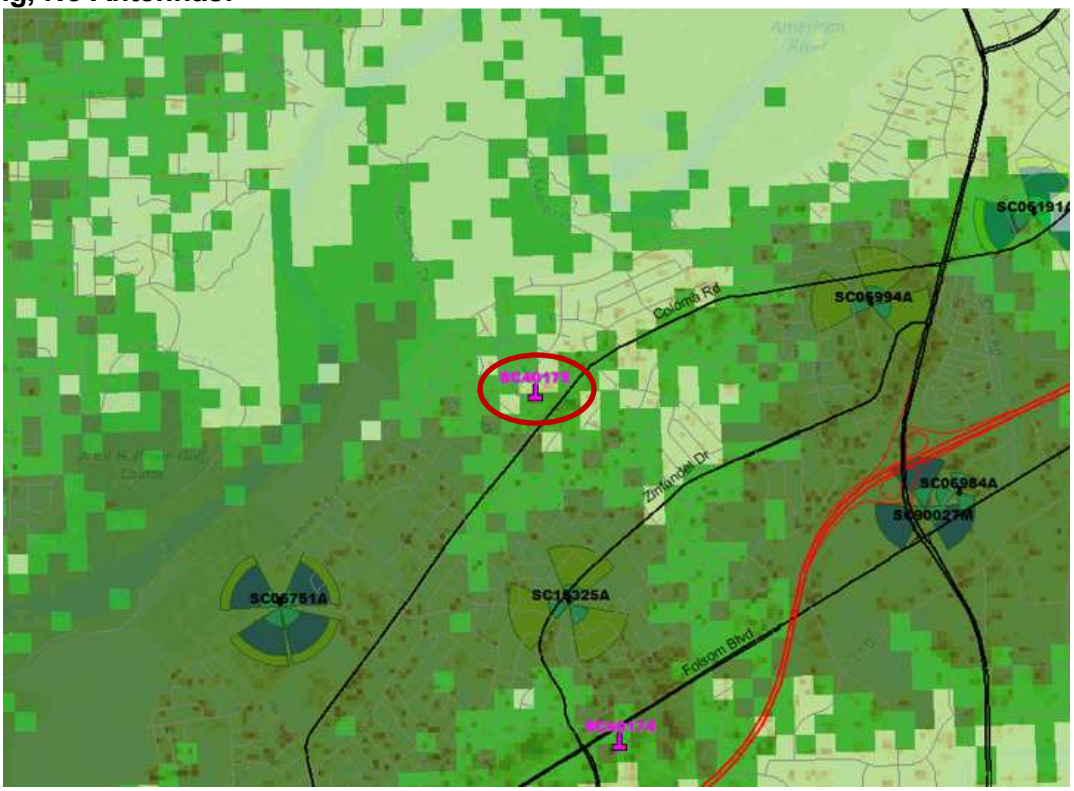

Proposed, Antennas at Overall Height 75 feet

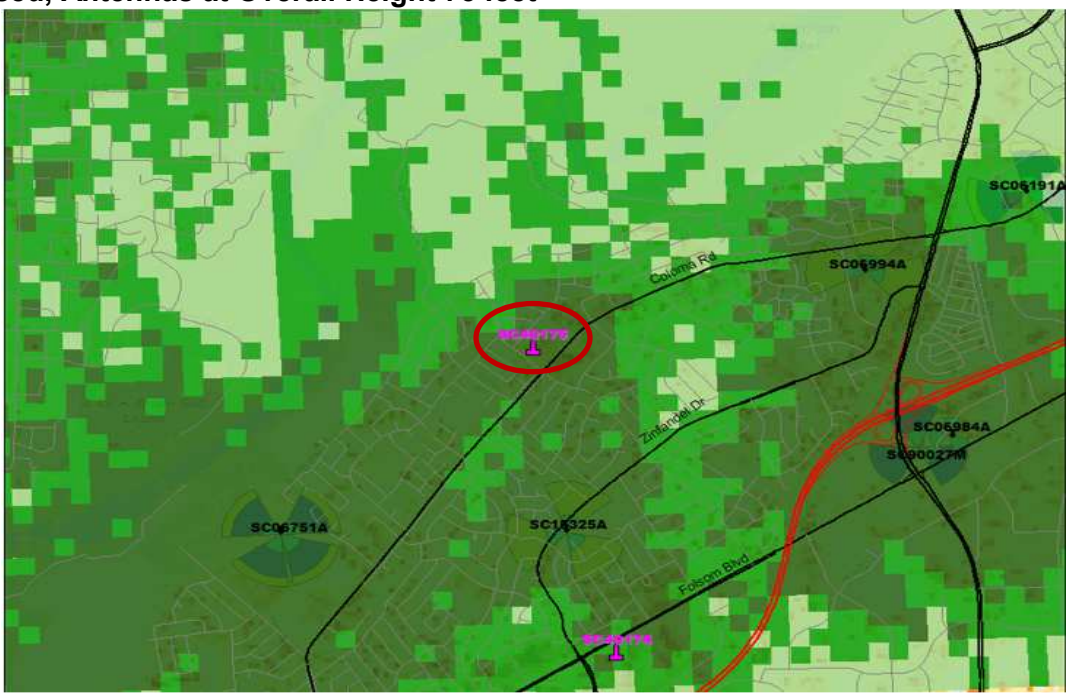

Screening

Staff requested the applicant provide proposed screened antenna renderings as shown in **Figure 9: Proposed Screening Device.**

Figure 9: Proposed Screening Device

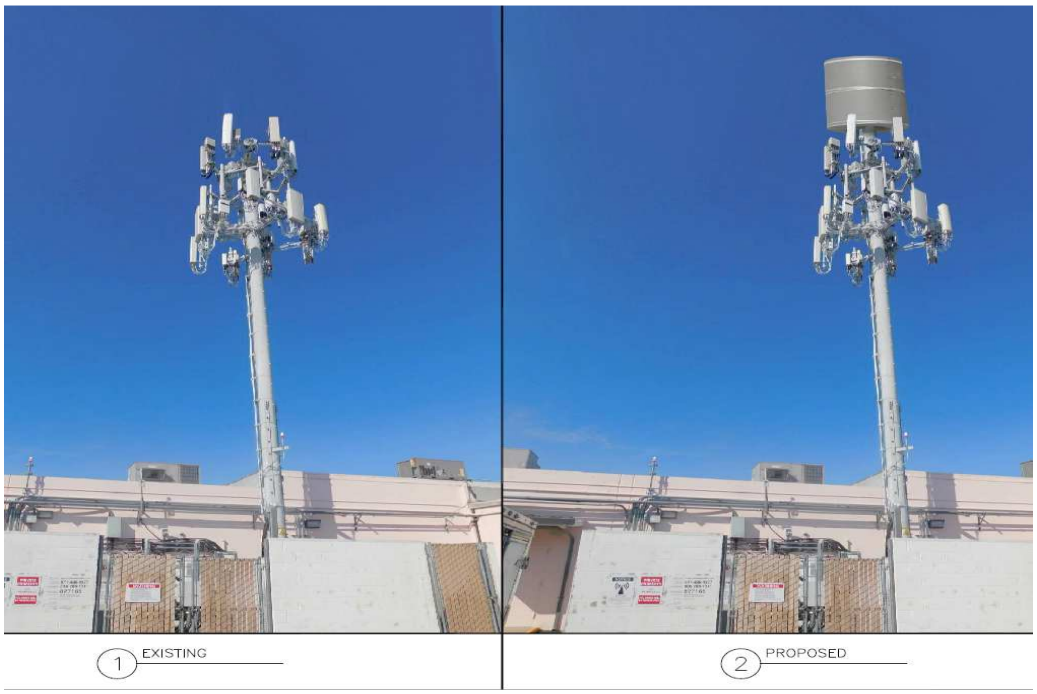

- The applicant provided the renderings with vented canister screening on the proposed antennas. However, due to specific frequencies the new antenna will be using, stealthing isn't possible due to overheating issue.
- In addition, the screening attempts made the proposed antennas more visually obtrusive than the stand-alone proposed antennas without screening.

Conditional Use Permit Findings

The approving authority may approve a Conditional Use Permit (Amendment) if all of the following findings can be found:

1. ***Finding:*** *The site size, dimensions, location, topography, and access are adequate for the needs of the proposed use, considering the proposed building mass, parking, traffic, noise, vibration, exhaust/emissions, light, glare, erosion, odor, dust, visibility, safety, and aesthetic considerations.*

   Evidence: The proposed project will be located on an existing telecommunication monopole, currently serving as a co-location for several existing antennas with corresponding equipment within a six-foot-high concrete block wall. The proposed additional ground area includes the same six-foot-high concrete wall as the existing ground area in order to be consistent. The size, location, topography, and access are adequate for the needs of the proposed use.

2. ***Finding:*** *The negative impacts of the proposed use on adjacent properties and on the public can be mitigated through application of other code standards or other reasonable conditions of approval.*

   Evidence: The proposed antennas, monopole extension, and screening wall for the ground equipment has been conditioned regarding material and color to be consistent with the existing monopole, antennas, and screen wall.

3. ***Finding:*** *All required public facilities have adequate capacity to serve the proposal.*

   Evidence: The site location includes existing telecommunication antennas and ground equipment with access to the site. Required public facilities have the capacity to serve the proposal.

4. ***Finding:*** *The project meets the requirements of the zoning code including development standards, design guidelines, and special use provisions.*

   Evidence: The proposed project is located on an existing telecommunication pole and is consistent with the zoning ordinance 23.907.020 (B)(2). "To minimize the overall visual impact, new wireless communication facilities shall be collocated with existing facilities, with other planned new facilities, and with other facilities such as water tanks, light standards, and other utility structures whenever feasible and aesthetically desirable. To facilitate collocation when deemed appropriate." Rather than build another telecommunication tower, the applicant is requesting additional height to an existing monopole that will increase the coverage area.

5. ***Finding:*** *If structures and site plans are considered nonconforming, the elements of a project that are nonconforming have been brought to compliance with the zoning code, where feasible.*

   Evidence: The existing monopole is considered nonconforming regarding the zoning district height limit. The existing monopole was approved in 2002 by Sacramento County and built at 60 feet in height. The applicant has provided coverage maps showing the height necessary for coverage for the area. The proposed overall 15-foot height increase to the existing monopole provides the most coverage. The proposed additions have been conditioned to match the existing utilities.

ENVIRONMENTAL

The proposed project is categorically exempt under Section 15303 (New Construction or Conversion of Small Structures) of the California Environmental Quality Act Guidelines.

RECOMMENDED MOTIONS

Staff recommends that the City Council find the project to be in compliance with the California Environmental Quality Act (CEQA) as exempt pursuant to CEQA Guidelines Section 15303 and adopt the Resolution approving the T-Mobile Facility, subject to the findings, Project Plans Exhibit A and Conditions of Approval Exhibit B.

ATTACHMENTS

1. Resolution
2. Exhibit A to the Resolution – Project Plans
3. Exhibit B to the Resolution – Conditions of Approval
4. Site Photos
5. 500’ Radius Map and Labels

ATTACHMENT 1

CITY OF RANCHO CORDOVA

RESOLUTION NO. XX-2019

A RESOLUTION OF THE CITY COUNCIL OF THE CITY OF RANCHO CORDOVA, STATE OF CALIFORNIA, APPROVING A CONDITIONAL USE PERMIT AMENDMENT FOR T-MOBILE FACILITY LOCATED AT 10653 COLOMA ROAD, PROJECT #DD9881

WHEREAS, T-Mobile (hereinafter referred to as Applicant) filed an application with the City of Rancho Cordova for the approval of a Conditional Use Permit Amendment to allow for a 10 foot height extension for the existing 60 foot monopole with a 5 foot antenna extension for an overall height increase of 15 feet, installation of additional cellular antennas and corresponding ground equipment and;

WHEREAS, the existing approved 60 foot in height monopole includes two sets of antennas at two different height levels and corresponding ground equipment within a 6-foot high concrete block wall; and

WHEREAS, the proposed project is located within an existing shopping center at 10653 Coloma Road in the City of Rancho Cordova (APN: 056-0222-021-0000); and

WHEREAS, the project site is located within the Village Commercial Mixed-Use District. The proposed height increase to the existing monopole requires a Conditional Use Permit Amendment; and

WHEREAS, the City Council of the City of Rancho Cordova has conducted a duly noticed public hearing pursuant to Government Code Section 65090 and has considered all written and verbal testimony presented during the hearing; and

WHEREAS, the City Council is the appropriate authority to hear and take action on this project; and

NOW, THEREFORE, BE IT HEREBY RESOLVED THE CITY COUNCIL THE CITY OF RANCHO CORDOVA approves the Conditional Use Permit Amendment for T-Mobile facility, subject to the following findings and supporting evidence, and attached project plans Exhibit A and Conditions of Approval Exhibit B.

A. **Finding**: The project is categorically exempt under Section 15303 (New Construction or Conversion of Small Structures)

   Evidence: Categorical exemption 15303 includes small facilities or structures as well as installation of small new equipment and facilities in small structures. The proposed height increase of the pole is 10 feet in height, the proposed antennas will extend 5 feet for a total height increase of 15 feet, and an increased ground area of 310 square feet to include corresponding ground equipment. There are no environmental resources within the vicinity of the project.

B. The project is consistent with all findings outlined in Chapter 23.134.030 of the City of Rancho Cordova Zoning Code, as follows:

   1. ***Finding:*** *The site size, dimensions, location, topography, and access are adequate for the needs of the proposed use, considering the proposed building*

mass, parking, traffic, noise, vibration, exhaust/emissions, light, glare, erosion, odor, dust, visibility, safety, and aesthetic considerations.

Evidence: The proposed project will be located on an existing telecommunication monopole, currently serving as a co-location for several existing antennas with corresponding equipment within a 6-foot high concrete block wall. The proposed additional ground area includes the same 6-foot-high concrete wall as the existing ground area screening wall in order to be consistent. The size, location, topography, and access are adequate for the needs of the proposed use.

2. ***Finding:*** *The negative impacts of the proposed use on adjacent properties and on the public can be mitigated through application of other code standards or other reasonable conditions of approval.*

   Evidence: The proposed antennas, monopole extension, and screening wall for the ground equipment has been conditioned regarding material and color to be consistent with the existing monopole, antennas, and screen wall.

3. ***Finding:*** *All required public facilities have adequate capacity to serve the proposal*

   Evidence: The site location includes existing telecommunication antennas and ground equipment with access to the site. Required public facilities have the capacity to serve the proposal.

4. ***Finding:*** *The project meets the requirements of the zoning code including development standards, design guidelines, and special use provisions.*

   Evidence: The proposed project is located on an existing telecommunication pole and is consistent with the zoning ordinance 23.907.020 (B)(2). "To minimize the overall visual impact, new wireless communication facilities shall be collocated with existing facilities, with other planned new facilities, and with other facilities such as water tanks, light standards, and other utility structures whenever feasible and aesthetically desirable. To facilitate collocation when deemed appropriate." Rather than build another telecommunication tower, the applicant is requesting additional height to an existing monopole that will increase the coverage area.

5. ***Finding:*** *If structures and site plans are considered nonconforming, the elements of a project that are nonconforming have been brought to compliance with the zoning code, where feasible.*

   Evidence: The existing monopole is considered nonconforming regarding the zoning district height limit. The existing monopole was approved in 2002 by Sacramento County and built at 60 feet in height. The applicant has provided coverage maps showing the height necessary for coverage for the area. The proposed overall 15-foot height increase to the existing monopole provides the most coverage. The proposed additions have been conditioned to match the existing utilities.

ATTACHMENT 1

PASSED AND ADOPTED by the City Council of the City of Rancho Cordova on the 7th day of October, 2019 by the following vote:

AYES:

NOES:

ABSENT:

ABSTAIN:

_____
Robert J. McGarvey, Mayor

ATTEST:

_____
Stacy Leitner, CMC
City Clerk

GENERAL NOTES

1. DRAWINGS ARE NOT TO BE SCALED, WRITTEN DIMENSIONS TAKE PRECEDENCE, AND THIS SET OF PLANS IS INTENDED TO BE USED FOR DIAGRAMMATIC PURPOSES ONLY, UNLESS NOTED OTHERWISE. THE GENERAL CONTRACTOR'S SCOPE OF WORK SHALL INCLUDE FURNISHING ALL MATERIALS, EQUIPMENT, LABOR AND ANYTHING ELSE DEEMED NECESSARY TO COMPLETE INSTALLATIONS AS DESCRIBED HEREIN.

2. PRIOR TO THE SUBMISSION OF BIDS, THE CONTRACTORS INVOLVED SHALL VISIT THE JOB SITE AND FAMILIARIZE THEMSELVES WITH ALL CONDITIONS AFFECTING THE PROPOSED PROJECT, WITH THE CONSTRUCTION AND CONTRACT DOCUMENTS, FIELD CONDITIONS AND CONFIRM THAT THE PROJECT MAY BE ACCOMPLISHED AS SHOWN PRIOR TO PROCEEDING WITH CONSTRUCTION. ANY ERRORS, OMISSIONS, OR DISCREPANCIES ARE TO BE BROUGHT TO THE ATTENTION OF THE ARCHITECT/ ENGINEER.

3. THE GENERAL CONTRACTOR SHALL RECEIVE WRITTEN AUTHORIZATION TO PROCEED WITH CONSTRUCTION PRIOR TO STARTING WORK ON ANY ITEM NOT CLEARLY DEFINED BY THE CONSTRUCTION DRAWINGS/CONTRACT DOCUMENTS.

4. THE CONTRACTOR SHALL SUPERVISE AND DIRECT THE PROJECT DESCRIBED HEREIN. THE CONTRACTOR SHALL BE SOLELY RESPONSIBLE FOR ALL CONSTRUCTION MEANS, METHODS, TECHNIQUES, SEQUENCES, AND PROCEDURES AND FOR COORDINATING ALL PORTIONS OF THE WORK UNDER THE CONTRACT.

5. THE CONTRACTOR SHALL INSTALL ALL EQUIPMENT AND MATERIALS ACCORDING TO MANUFACTURER'S/VENDOR'S SPECIFICATIONS UNLESS NOTED OTHERWISE OR WHERE LOCAL CODES OR ORDINANCES TAKE PRECEDENCE.

6. ALL WORK PERFORMED ON PROJECT AND MATERIALS INSTALLED SHALL BE IN STRICT ACCORDANCE WITH ALL APPLICABLE CODES, REGULATIONS, AND ORDINANCES. CONTRACTOR SHALL GIVE ALL NOTICES AND COMPLY WITH ALL LAWS, ORDINANCES, RULES, REGULATIONS, AND LAWFUL ORDERS OF ANY PUBLIC AUTHORITY, MUNICIPAL AND UTILITY COMPANY SPECIFICATIONS, AND LOCAL AND STATE JURISDICTIONAL CODES BEARING ON THE PERFORMANCE OF THE WORK.

7. GENERAL CONTRACTOR SHALL PROVIDE AT THE PROJECT SITE A FULL SET OF CONSTRUCTION DOCUMENTS UPDATED WITH THE LATEST REVISIONS AND ADDENDUMS OR CLARIFICATIONS FOR THE USE BY ALL PERSONNEL INVOLVED WITH THE PROJECT.

8. THE STRUCTURAL COMPONENTS OF THIS PROJECT SITE/FACILITY ARE NOT TO BE ALTERED BY THIS CONSTRUCTION PROJECT UNLESS NOTED OTHERWISE.

9. DETAILS HEREIN ARE INTENDED TO SHOW END RESULT OF DESIGN. MINOR MODIFICATIONS MAY BE REQUIRED TO SUIT JOB CONDITIONS OR SITUATIONS, AND SUCH MODIFICATIONS SHALL BE INCLUDED AS PART OF THE SCOPE OF WORK.

10. SEAL PENETRATIONS THROUGH FIRE-RATED AREAS WITH U.L. LISTED OR FIRE MARSHALL APPROVED MATERIALS IF APPLICABLE TO THIS FACILITY AND OR PROJECT SITE.

11. THE CONTRACTOR SHALL MAKE NECESSARY PROVISIONS TO PROTECT EXISTING IMPROVEMENTS, EASEMENTS, PAVING, CURBING, ETC. DURING CONSTRUCTION. UPON COMPLETION OF WORK, CONTRACTOR SHALL REPAIR ANY DAMAGE THAT MAY HAVE OCCURRED DUE TO THE CONSTRUCTION ON OR ABOUT THE PROPERTY.

12. CONTRACTOR SHALL SEE TO IT THAT GENERAL WORK AREA IS KEPT CLEAN AND HAZARD FREE DURING CONSTRUCTION AND DISPOSE OF ALL DIRT, DEBRIS, RUBBISH AND REMOVE EQUIPMENT NOT SPECIFIED AS REMAINING ON THE PROPERTY. PREMISES SHALL BE LEFT IN CLEAN CONDITION AND FREE FROM PAINT SPOTS, DUST, OR SMUDGES OF ANY NATURE.

13. THE ARCHITECTS/ENGINEERS HAVE MADE EVERY EFFORT TO SET FORTH IN THE CONSTRUCTION AND CONTRACT DOCUMENTS THE COMPLETE SCOPE OF WORK. CONTRACTORS BIDDING THE JOB ARE NEVERTHELESS CAUTIONED THAT MINOR OMISSIONS OR ERRORS IN THE DRAWINGS AND OR SPECIFICATIONS SHALL NOT EXCUSE SAID CONTRACTOR FROM COMPLETING THE PROJECT AND IMPROVEMENTS IN ACCORDANCE WITH THE INTENT OF THESE DOCUMENTS. THE BIDDER SHALL BEAR THE RESPONSIBILITY OF NOTIFYING (IN WRITING) THE ARCHITECT/ENGINEER OF ANY CONFLICTS, ERRORS, OR OMISSIONS PRIOR TO THE SUBMISSION OF CONTRACTOR'S PROPOSAL. IN THE EVENT OF DISCREPANCIES THE CONTRACTOR SHALL PRICE THE MORE COSTLY OR EXTENSIVE WORK, UNLESS DIRECTED OTHERWISE.

T··Mobile·

WEST LLC.

1755 CREEKSIDE OAKS DRIVE # 190, SACRAMENTO, CA 95833

BU877165 – CORDOVA LANE
SC40175A – NSD PROJECT

10653 COLOMA ROAD
RANCHO CORDOVA, CA 95670
APN: 056-0222-021

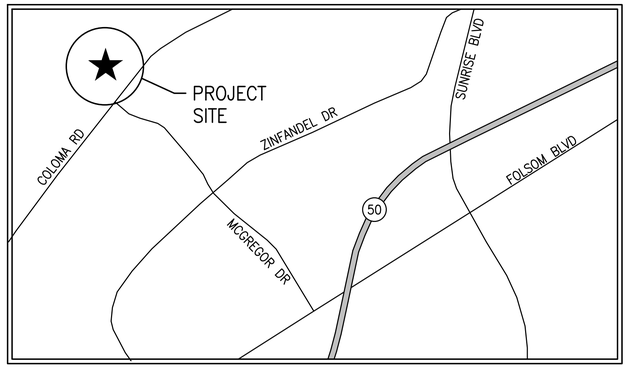

LOCATION PLAN

DIRECTIONS

FROM T-MOBILE OFFICE @ 1755 CREEKSIDE OAKS DRIVE, SACRAMENTO, CA 95833:

1. HEAD WEST ON CREEKSIDE OAKS DR TOWARD CAPITAL PARK DR
2. TURN LEFT ONTO CAPITAL PARK DR
3. TURN LEFT ONTO NATOMAS PARK DR
4. TURN RIGHT AT THE 1ST CROSS STREET ONTO GARDEN HWY
5. SLIGHT RIGHT TO MERGE ONTO I-5 S TOWARD LOS ANGELES
6. MERGE ONTO I-5 S
7. USE THE RIGHT 2 LANES TO TAKE EXIT 518 FOR US-50 E/CA-99 S TOWARD FRESNO
8. KEEP LEFT AND MERGE ONTO CA-99 S/I-80BL E/US-50 E
9. CONTINUE ONTO US-50 E
10. USE THE RIGHT 2 LANES TO TAKE EXIT 15 FOR MATHER FIELD ROAD TOWARD RANCHO CORDOVA
11. USE THE LEFT 2 LANES TO TURN LEFT ONTO MATHER FIELD RD
12. USE THE RIGHT 2 LANES TO TURN RIGHT ONTO FOLSOM BLVD
13. USE THE LEFT 2 LANES TO TURN LEFT ONTO COLOMA RD
14. TURN LEFT ONTO MCGREGOR DR
15. TURN RIGHT
16. TURN LEFT
17. DESTINATION WILL BE ON THE LEFT

PROJECT MILESTONES

02/28/2019	90% CONSTRUCTION DOCUMENTS
04/22/2019	90% CONSTRUCTION DOCUMENTS REV 1
06/19/2019	90% CONSTRUCTION DOCUMENTS REV 2
06/26/2019	90% CONSTRUCTION DOCUMENTS REV 3
07/10/2019	100% CONSTRUCTION DOCUMENTS

PROJECT DIRECTORY

LANDLORD:
CROWN CASTLE USA INC.
2000 CORPORATE DR
CANNONSBURG, PA, 15317
724-416-2000

ARCHITECT:
MANUEL S. TSIHLAS
MST ARCHITECTS, INC.
1520 RIVER PARK DRIVE
SACRAMENTO, CA 95815
916-567-9630
manuel@mstarchitects.com

STRUCTURAL ENGINEER:
JOE DABEL
CARTWRIGHT ARCHITECTS & ENGINEERS
2120 NORTH MAIN STREET
LOGAN, UT 84341
PH: 435-753-2850 EXT 105

APPLICANT:
T-MOBILE WEST LLC.
1755 CREEKSIDE OAKS DR. #190
SACRAMENTO, CA 95833

CONSTRUCTION MANAGER:
BUDD WUELFING
T-MOBILE WEST LLC.
1755 CREEKSIDE OAKS DR. #130
SACRAMENTO, CA 95833
530-863-7342

PROJECT SUMMARY

PROPERTY INFORMATION:

LATITUDE	N38° 36' 44.80"	NAD 83
LONGITUDE	W121° 17' 30.00"	NAD 83

ASSESSOR'S PARCEL NUMBER: 056-0222-021

JURISDICTION: CITY OF RANCHO CORDOVA

OCCUPANCY: U (UNMANNED TELECOMMUNICATIONS FACILITY)

TYPE OF CONSTRUCTION: V-B

ZONING: VCMU

CODE COMPLIANCE

ALL WORK AND MATERIALS SHALL BE PERFORMED AND INSTALLED IN ACCORDANCE WITH THE CURRENT EDITIONS OF THE FOLLOWING CODES AS ADOPTED BY THE LOCAL GOVERNING AUTHORITIES. NOTHING IN THESE PLANS IS TO BE CONSTRUED TO PERMIT WORK NOT CONFORMING TO THESE CODES:
2016 CALIFORNIA BUILDING STANDARDS CODE, TITLE 24, CALIFORNIA CODE OF REGULATIONS EFFECTIVE JANUARY 1, 2017

PART 1	CALIFORNIA BUILDING STANDARDS ADMINISTRATIVE CODE
PART 2	CALIFORNIA BUILDING CODE
PART 2.5	CALIFORNIA RESIDENTIAL BUILDING CODE
PART 3	CALIFORNIA ELECTRICAL CODE
PART 4	CALIFORNIA MECHANICAL CODE
PART 5	CALIFORNIA PLUMBING CODE
PART 6	CALIFORNIA ENERGY CODE
PART 8	CALIFORNIA HISTORICAL BUILDING CODE
PART 9	CALIFORNIA FIRE CODE
PART 10	CALIFORNIA EXISTING BUILDING CODE
PART 11	CALIFORNIA GREEN BUILDING STANDARDS CODE
PART 12	CALIFORNIA REFERENCE STANDARDS CODE

LOCAL COUNTY OR CITY ORDINANCES
ACCESSIBILITY REQUIREMENTS: THIS FACILITY IS UNMANNED AND NOT FOR HUMAN HABITATION. ACCESSIBILITY NOT REQUIRED IN ACCORDANCE WITH THE 2016 CBC 11B-203.5, AND 11B-202.4 EXCEPTION 7.

PROJECT DESCRIPTION

PROPOSED MODIFICATION OF AN EXISTING CROWN CASTLE TELECOMMUNICATIONS FACILITY, INCLUDING:
* PROPOSED T-MOBILE 10'-0" x 31'-0" EQUIPMENT LEASE AREA.
* PROPOSED T-MOBILE EQUIPMENT CABINET.
* PROPOSED T-MOBILE STANDBY GENERATOR.
* (9) PROPOSED T-MOBILE ANTENNAS, (3) PER SECTOR.
* (6) PROPOSED T-MOBILE RRH UNITS, (2) PER SECTOR.
* (3) PROPOSED T-MOBILE 6x12 HYBRID CABLES.
* POWER AND TELCO BROUGHT TO SITE.

INDEX OF DRAWINGS

1.	T1.1	TITLE SHEET, LOCATION PLAN, PROJECT DATA
2.	A1.1	OVERALL SITE PLAN
3.	A1.2	ENLARGED SITE PLAN & EQUIPMENT LAYOUT PLANS
4.	A2.1	ANTENNA LAYOUT PLAN
5.	A3.1	PROJECT ELEVATIONS
6.	A4.1	CONSTRUCTION DETAILS
7.	A4.2	CONSTRUCTION DETAILS
8.	A5.1	STANDBY GENERATOR SPECIFICATION SHEETS
9.	A5.2	STANDBY GENERATOR INSTALLATION DETAILS
10.	E1.1	ELECTRICAL ONE-LINE DIAGRAM, PANEL SCHEDULE
11.	E2.1	GROUNDING PLAN
12.	E2.2	GROUNDING DETAILS
13.	S001	GENERAL
14.	S101	FOUNDATION PLAN

CROWN CASTLE
MST ARCHITECTS WIRELESS DIVISION
1520 River Park Drive, Sacramento, CA 95815
916-567-9630
www.MSTArchitects.com

THESE DRAWINGS AND SPECIFICATIONS AS INSTRUMENTS OF SERVICE, ARE AND SHALL REMAIN THE PROPERTY OF MANUEL S. TSIHLAS, ARCHITECT, INC. WHETHER THE PROJECT FOR WHICH THEY ARE MADE IS EXECUTED OR NOT. THE REPRODUCTION, PUBLICATION OR USE OF THESE DRAWINGS AND SPECIFICATIONS, BY ANY METHOD OR SYSTEM FOR ANY PURPOSE, WITHOUT WRITTEN CONSENT OF THE ARCHITECT. COPYRIGHT, MANUEL S. TSIHLAS, ARCHITECT, INC. ALL RIGHTS RESERVED.

T··Mobile· WEST LLC.
BU877165 – CORDOVA LANE
SC40175A – NSD PROJECT
10653 COLOMA ROAD
RANCHO CORDOVA, CA 95670
SHEET TITLE: TITLE SHEET, LOCATION PLAN, PROJECT DATA

LICENSED ARCHITECT MANUEL S. TSIHLAS No. C-28021 Exp. 08-19 STATE OF CALIFORNIA
SIGNED: 07/10/19

Revisions:
1 --
2 --
3 --
4 --
5 --

File:213.0870_T11.dwg
Drawn By: CTC
Checked By: SV
Scale: AS NOTED
Date: 07/10/2019

Job No. 213.0870

T1.1

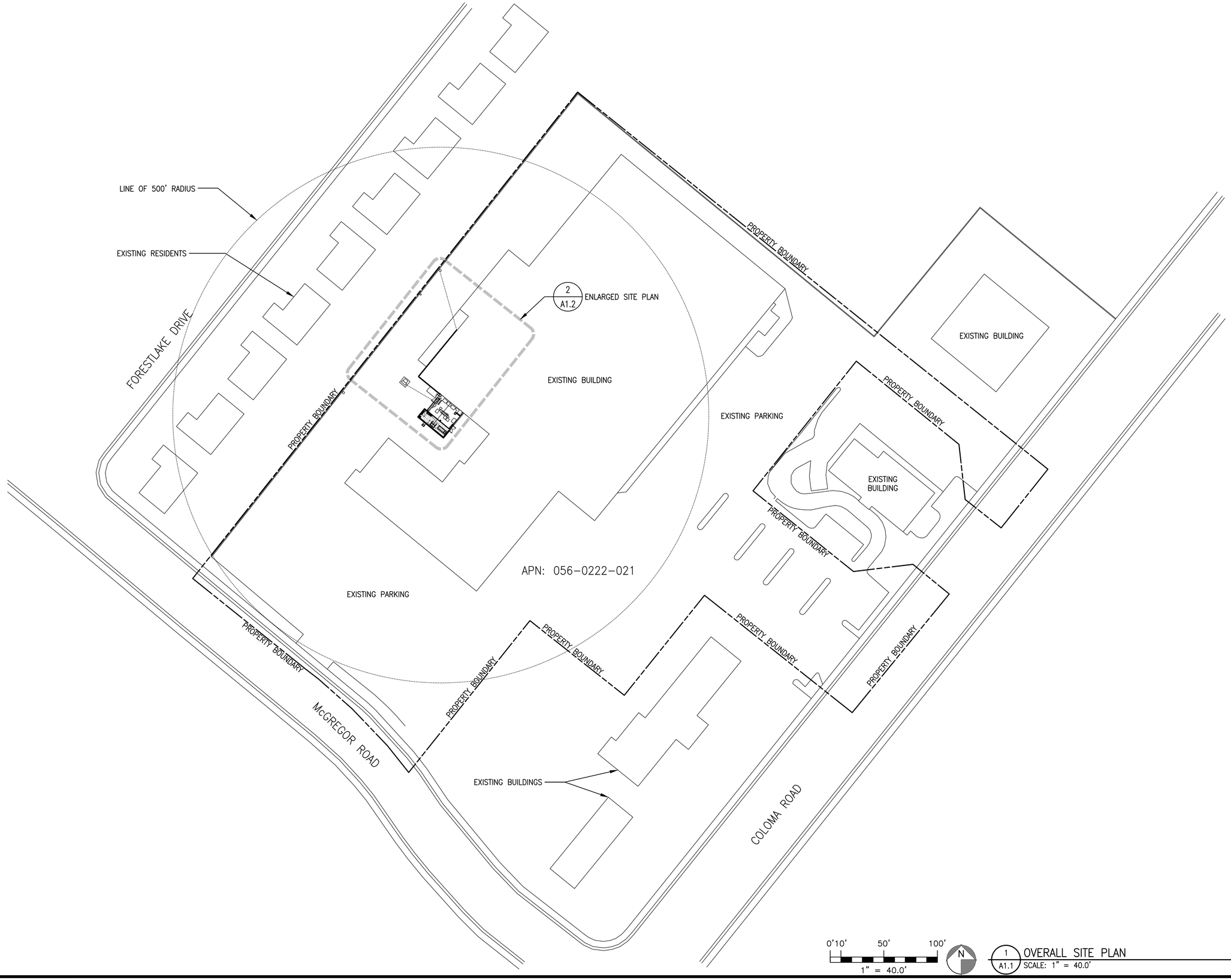

1 A1.1 OVERALL SITE PLAN
SCALE: 1" = 40.0'

MST ARCHITECTS
WIRELESS DIVISION
1520 River Park Drive, Sacramento, CA 95815
916-567-9630
www.MSTArchitects.com

CROWN CASTLE

THESE DRAWINGS AND SPECIFICATIONS & INSTRUMENTS OF SERVICE, ARE AND SHALL REMAIN THE PROPERTY OF MARK S. TOMAS, ARCHITECT, INC., WHETHER THE PROJECT FOR WHICH THEY ARE MADE IS EXECUTED OR NOT. THE REPRODUCTION, PUBLICATION OR USE OF THESE DRAWINGS AND SPECIFICATIONS, BY ANY PERSON OR ENTITY FOR ANY PURPOSE, EXCEPT FOR WRITTEN CONSENT OF THE ARCHITECT. COPYRIGHT, MARK S. TOMAS, ARCHITECT, INC. ALL RIGHTS RESERVED.

T··Mobile·
WEST LLC.

BU877165 – CORDOVA LANE
SC40175A – NSD PROJECT
10653 COLOMA ROAD
RANCHO CORDOVA, CA 95670

SHEET TITLE: OVERALL SITE PLAN

LICENSED ARCHITECT
MARK S. TOMAS
C-28021
Exp. 08-19
STATE OF CALIFORNIA
SIGNED: 07/10/19

Revisions:
△ --
△ --
△ --
△ --
△ --

File:213.0870_A11.dwg
Drawn By: CTC
Checked By: SV
Scale: AS NOTED
Date: 07/10/2019

Job No. 213.0870

A1.1

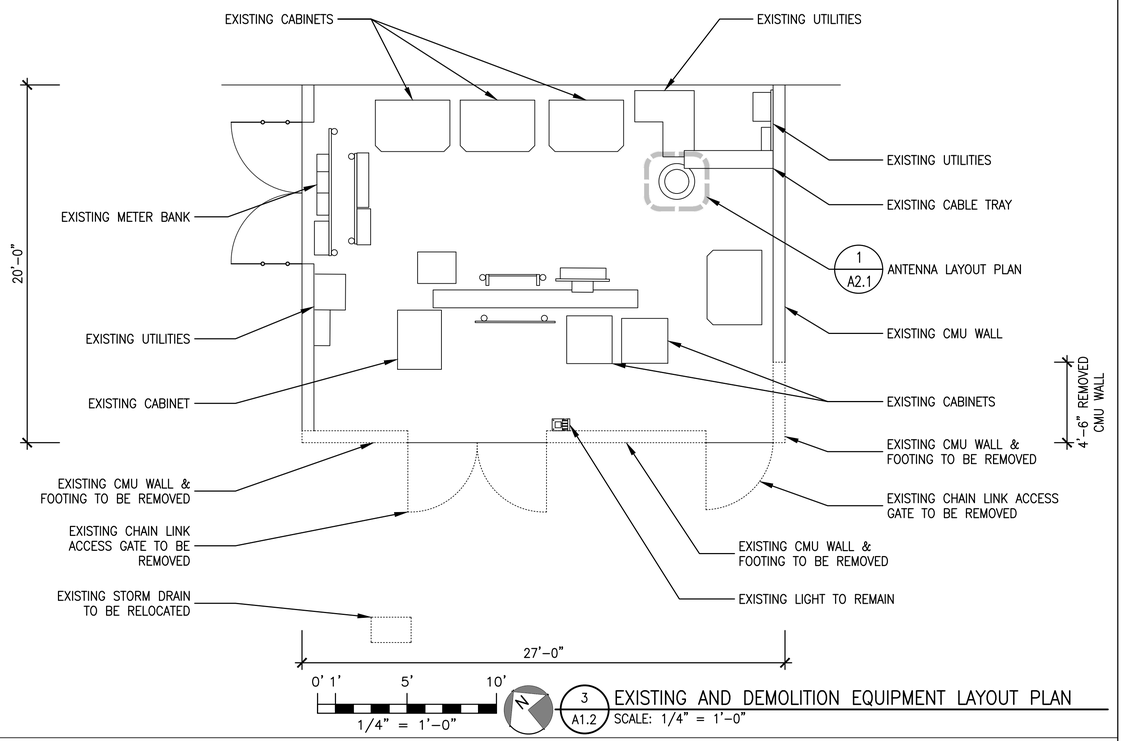

3 A1.2 EXISTING AND DEMOLITION EQUIPMENT LAYOUT PLAN
SCALE: 1/4" = 1'-0"

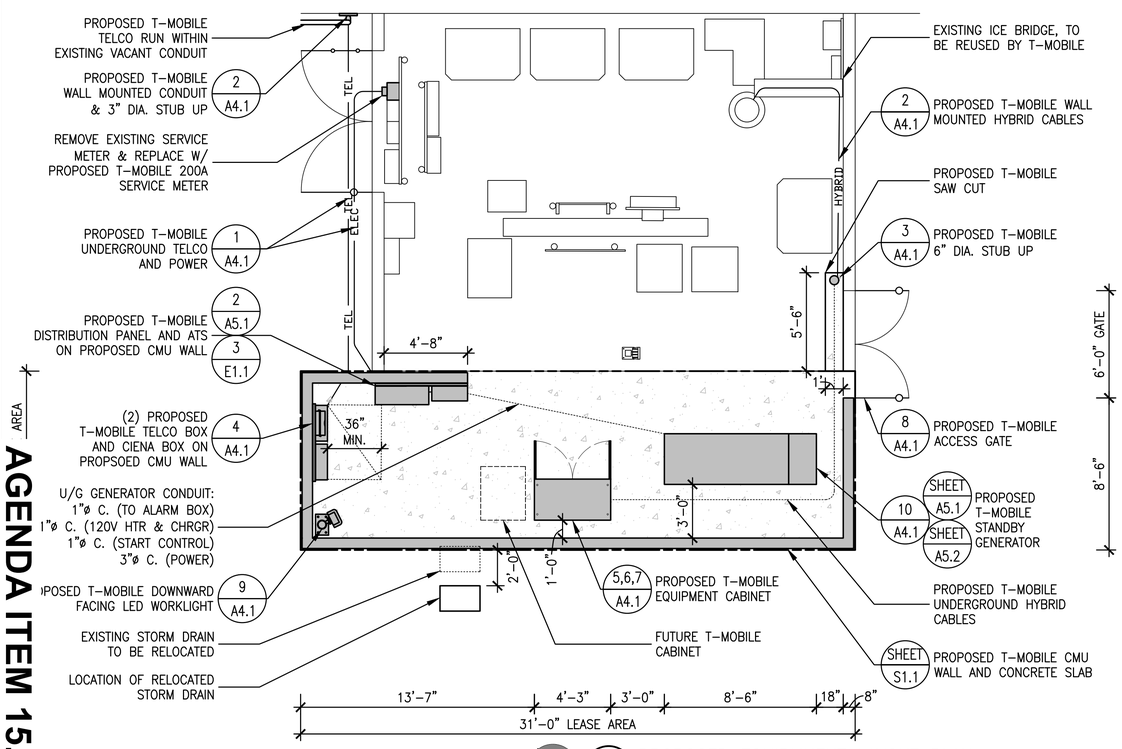

2 A1.2 PROPOSED EQUIPMNENT LAYOUT PLAN
SCALE: 1/4" = 1'-0"

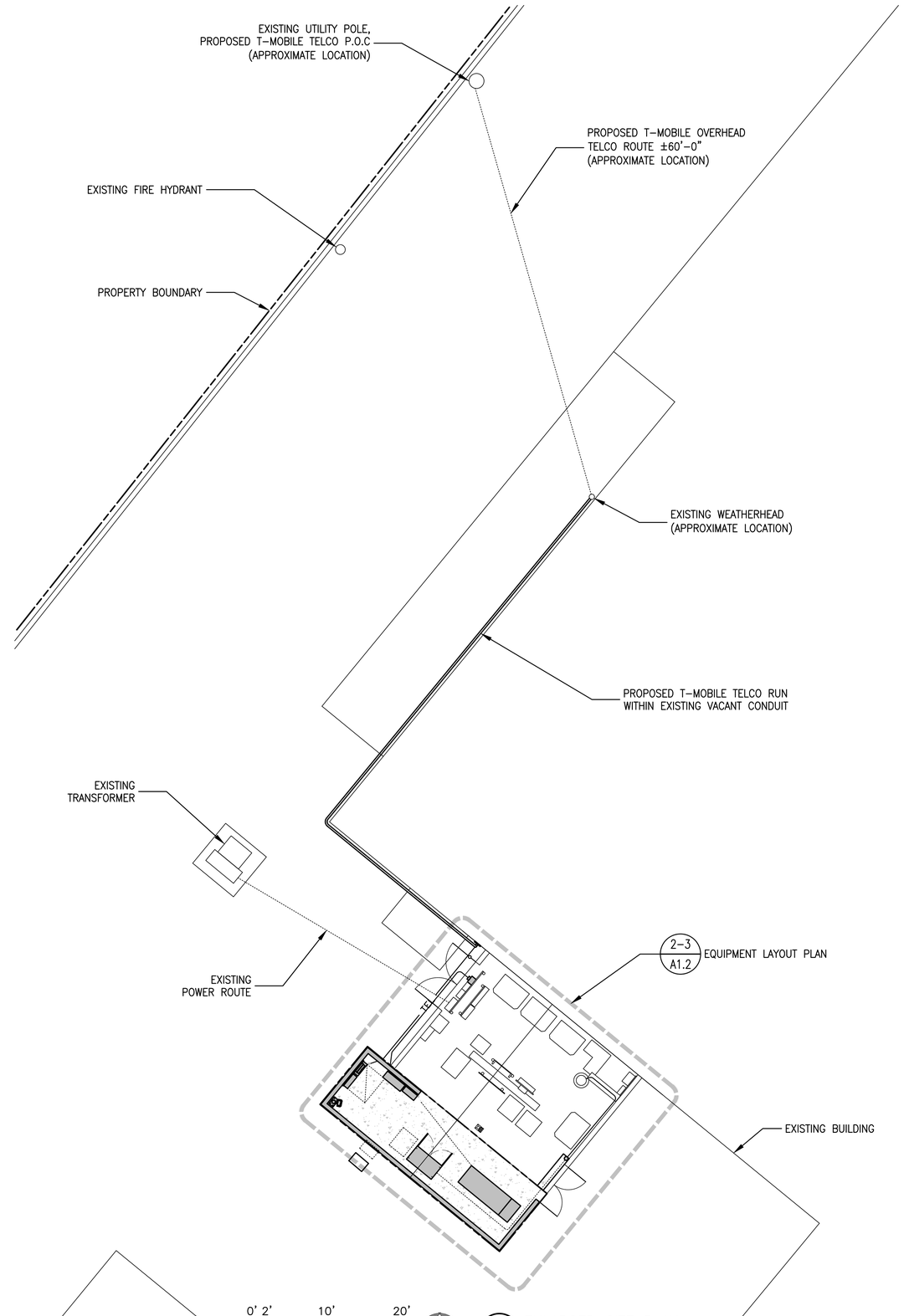

2 A1.2 ENLARGED SITE PLAN
SCALE: 1/8" = 1'-0"

MST ARCHITECTS WIRELESS DIVISION
1520 River Park Drive, Sacramento, CA 95815
916-567-9630
www.MSTArchitects.com

THESE DRAWINGS AND SPECIFICATIONS & INSTRUMENTS OF SERVICE, ARE AND SHALL REMAIN THE PROPERTY OF MARVEL S. TSIHALAS, ARCHITECT, INC., WHETHER THE PROJECT FOR WHICH THEY ARE MADE IS EXECUTED OR NOT. THE REPRODUCTION, PUBLICATION OR USE OF THESE DRAWINGS AND SPECIFICATIONS, OR ANY PART THEREOF, WITHOUT PRIOR WRITTEN CONSENT OF THE ARCHITECT. COPYRIGHT, MARVEL S. TSIHALAS, ARCHITECT, INC. ALL RIGHTS RESERVED.

CROWN CASTLE

T-Mobile WEST LLC.

BU877165 - CORDOVA LANE
SC40175A - NSD PROJECT
10653 COLOMA ROAD
RANCHO CORDOVA, CA 95670

SHEET TITLE:
ENLARGED SITE PLAN & EQUIPMENT LAYOUT PLANS

LICENSED ARCHITECT
MARVEL S. TSIHALAS
Lic. C-58021
Exp. 08-19
STATE OF CALIFORNIA
SIGNED: 07/10/19

Revisions:
△ --
△ --
△ --
△ --
△ --

File:213.0870_A12.dwg
Drawn By: CTC
Checked By: SV
Scale: AS NOTED
Date: 07/10/2019

Job No. 213.0870

A1.2

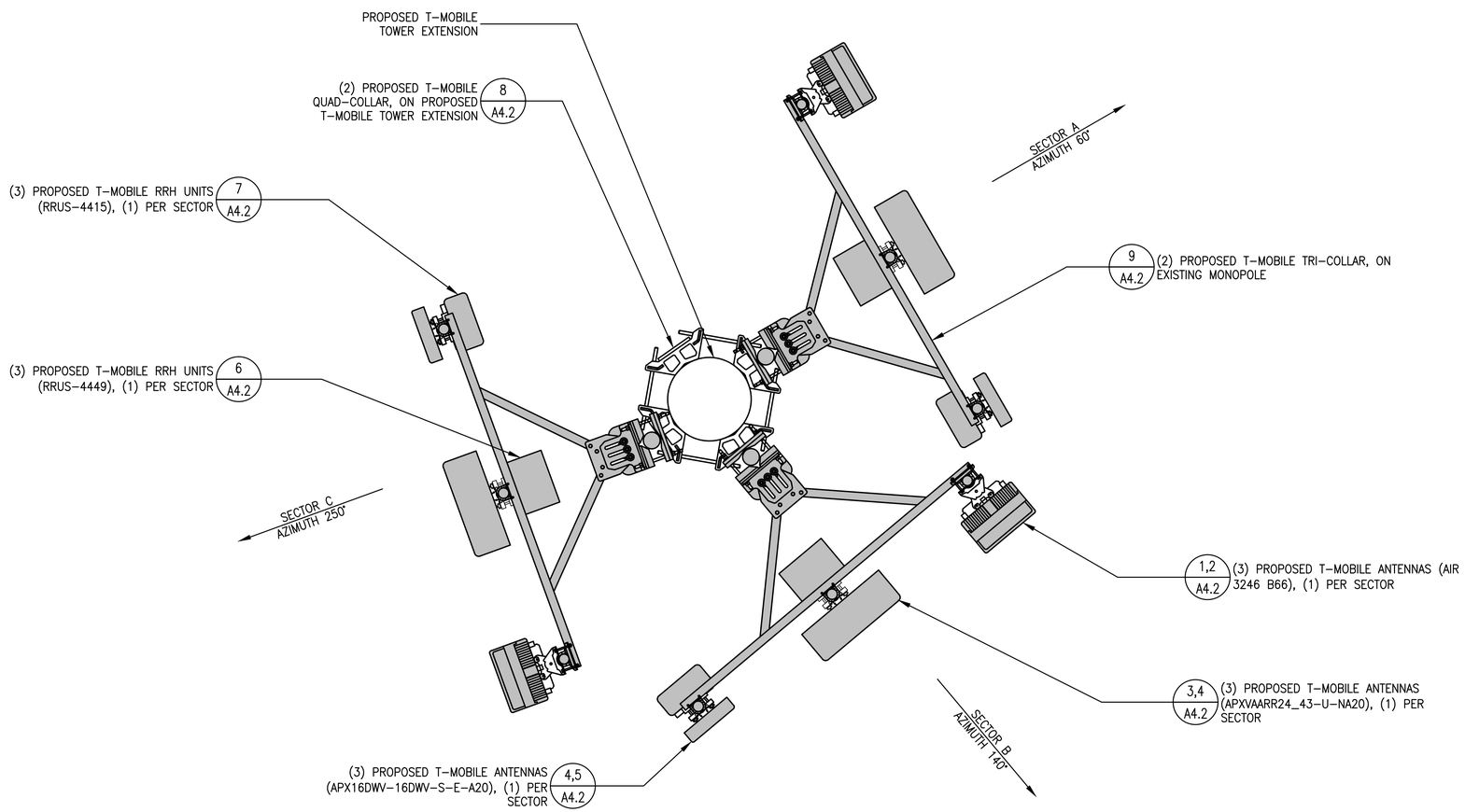

0' 1' 5' 10'
3/4" = 1'-0"

N

2 A2.1 ANTENNA LAYOUT PLAN
SCALE: 3/4" = 1'-0"

AGENDA ITEM 15.2

MST ARCHITECTS
WIRELESS DIVISION
1520 River Park Drive, Sacramento, CA 95815
916-567-9630
www.MSTArchitects.com

CROWN CASTLE

THESE DRAWINGS AND SPECIFICATIONS & INSTRUMENTS OF SERVICE, ARE AND SHALL REMAIN THE PROPERTY OF MARVEL S. TOMAS, ARCHITECT, INC. WHETHER THE PROJECT FOR WHICH THEY ARE MADE IS EXECUTED OR NOT. THE REPRODUCTION, PUBLICATION OR USE OF THESE DRAWINGS AND SPECIFICATIONS BY OTHERS IS PROHIBITED WITHOUT THE WRITTEN CONSENT OF THE ARCHITECT. COPYRIGHT, MARVEL S. TOMAS, ARCHITECT, INC. ALL RIGHTS RESERVED.

T-Mobile WEST LLC.

BU877165 - CORDOVA LANE
SC40175A - NSD PROJECT
10653 COLOMA ROAD
RANCHO CORDOVA, CA 95670

SHEET TITLE: ANTENNA LAYOUT PLANS

LICENSED ARCHITECT
MARVEL S. TOMAS
Lic. C-28021
Exp. 08-19
STATE OF CALIFORNIA
SIGNED: 07/10/19

Revisions:
△ --
△ --
△ --
△ --
△ --

File:213.0870_A21.dwg
Drawn By: CTC
Checked By: SV
Scale: AS NOTED
Date: 07/10/2019

Job No. 213.0870

A2.1

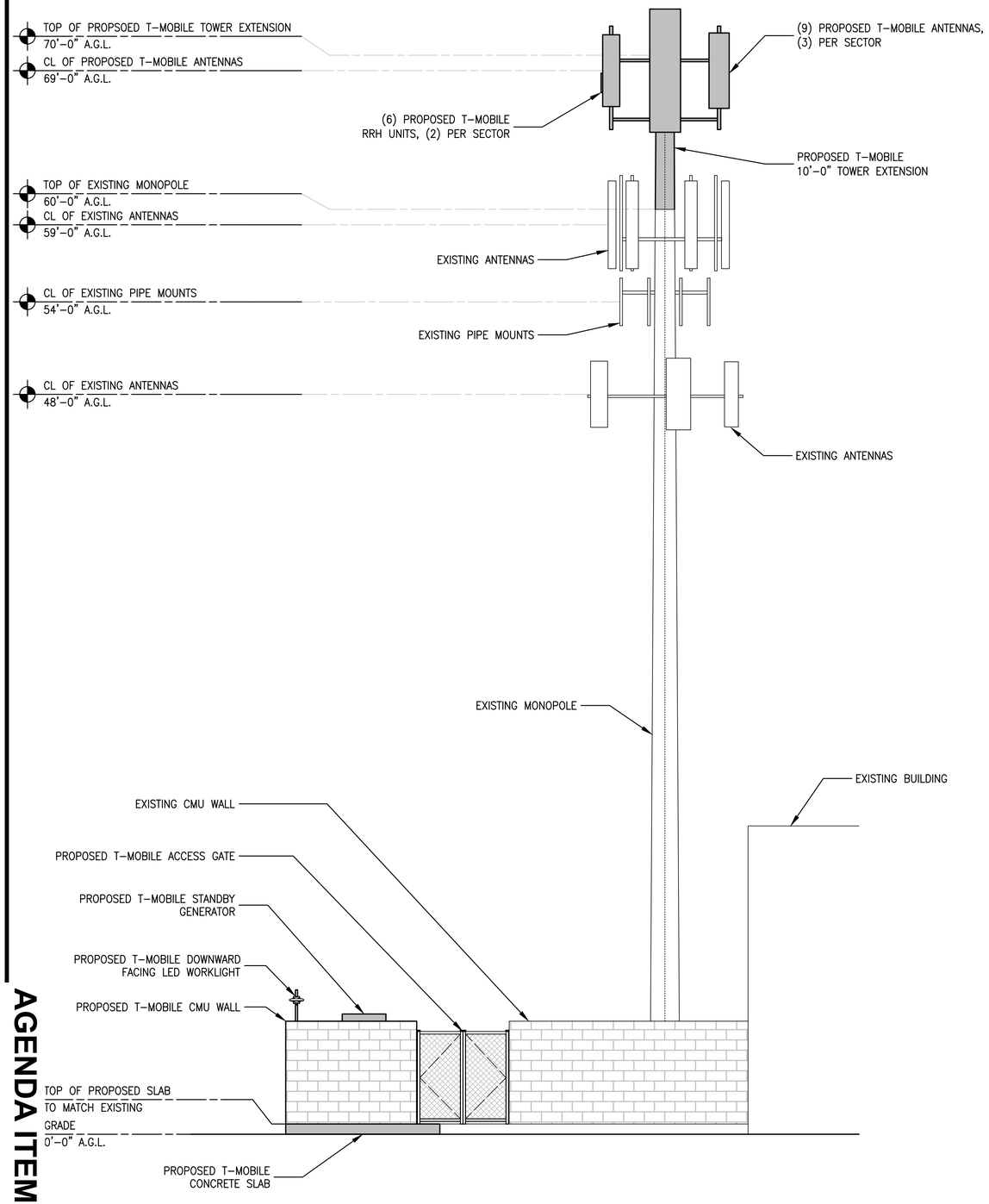

2 A3.1 NORTHWEST ELEVATION
SCALE: 1/4" = 1'-0"

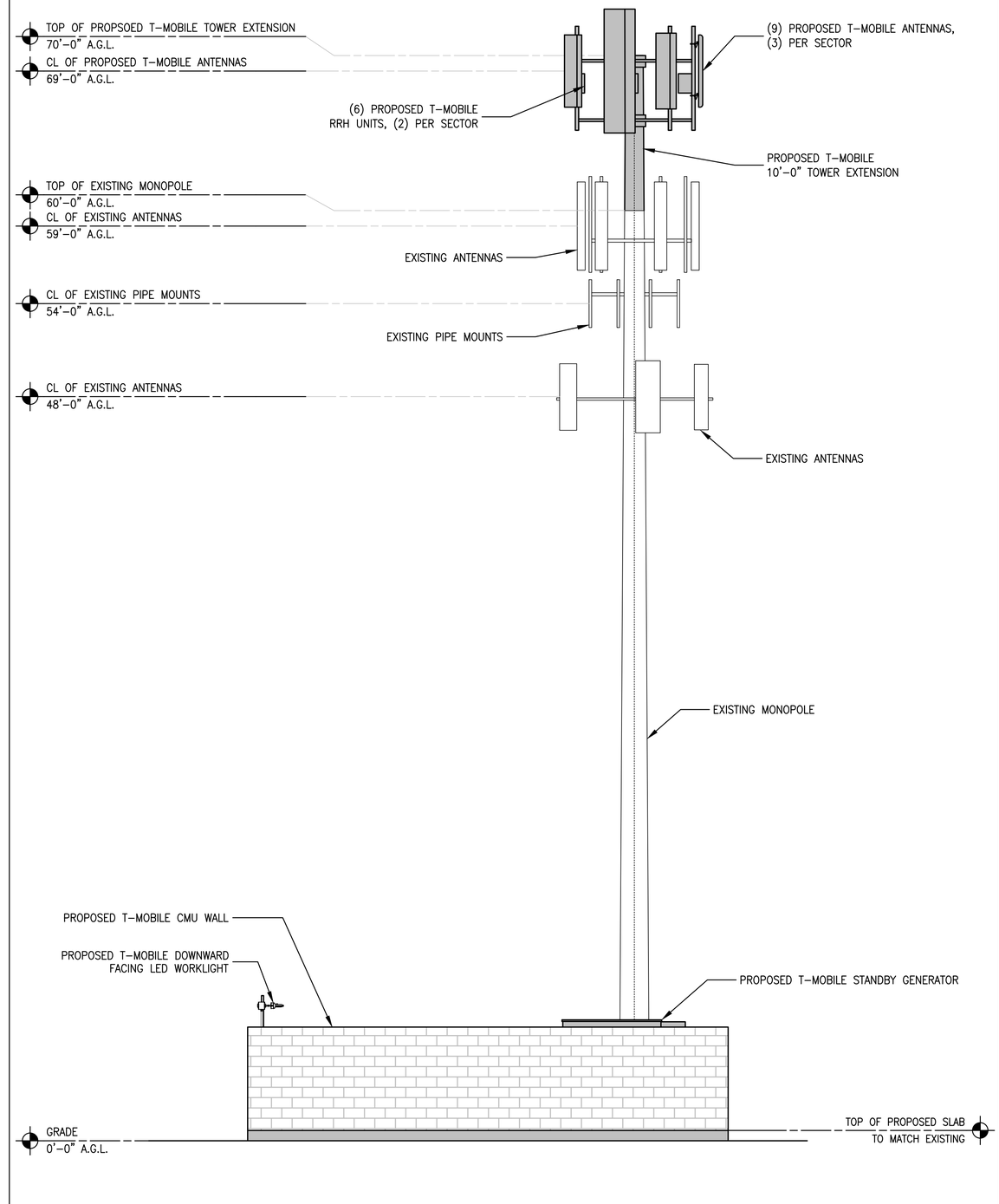

1 A3.1 SOUTHWEST ELEVATION
SCALE: 1/4" = 1'-0"

AGENDA ITEM 15.2

CROWN CASTLE
MST ARCHITECTS WIRELESS DIVISION
1520 River Park Drive, Sacramento, CA 95815
916-567-9630
www.MSTArchitects.com

THESE DRAWINGS AND SPECIFICATIONS & INSTRUMENTS OF SERVICE, ARE AND SHALL REMAIN THE PROPERTY OF MARVEL S. TSIKAS, ARCHITECT, INC. WHETHER THE PROJECT FOR WHICH THEY WERE MADE IS EXECUTED OR NOT. THE REPRODUCTION, PUBLICATION OR USE BY OTHERS IS PROHIBITED WITHOUT THE WRITTEN CONSENT OF THE ARCHITECT. COPYRIGHT, MARVEL S. TSIKAS, ARCHITECT, INC. ALL RIGHTS RESERVED.

T-Mobile WEST LLC.
BU877165 - CORDOVA LANE
SC40175A - NSD PROJECT
10653 COLOMA ROAD
RANCHO CORDOVA, CA 95670

SHEET TITLE: PROJECT ELEVATIONS

LICENSED ARCHITECT
MARVEL S. TSIKAS
Lic. C-28021
Exp. 08-19
STATE OF CALIFORNIA
SIGNED: 07/10/19

Revisions:
△ --
△ --
△ --
△ --
△ --

File:213.0870_A31.dwg
Drawn By: CTC
Checked By: SV
Scale: AS NOTED
Date: 07/10/2019

Job No. 213.0870

A3.1

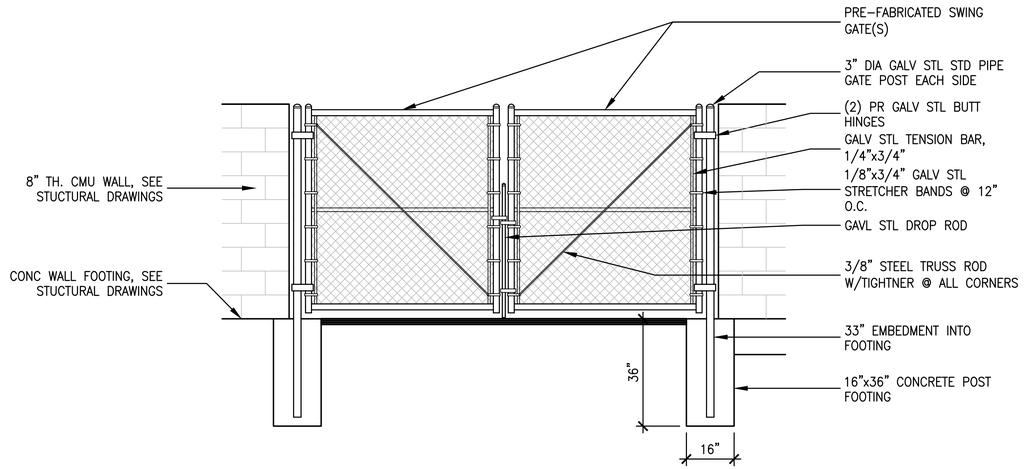

8 A4.1 DOUBLE SWING GATE DETAIL
SCALE: 1/2" = 1'-0"

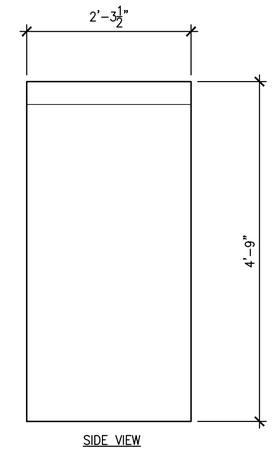

SIDE VIEW

GROSS WEIGHT:
792# FULLY EQUIPPED
1422# FULLY EQUIPPED W/ 200AhBATTERIES

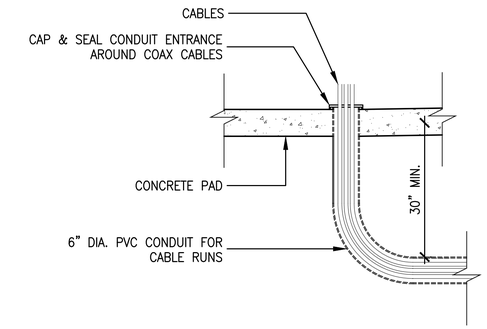

3 A4.1 UNDERGROUND CONDUIT DETAIL
SCALE: 3/4" = 1'-0"

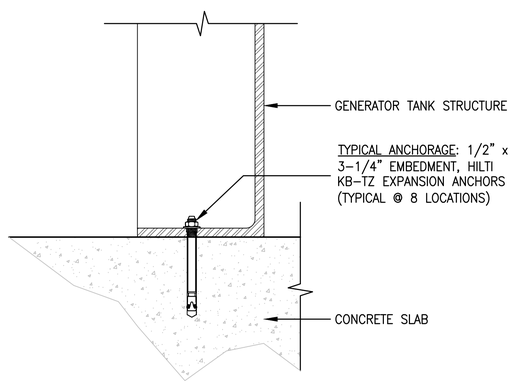

10 A4.1 GENERATOR ATTACHMENT DETAIL
SCALE: NO SCALE

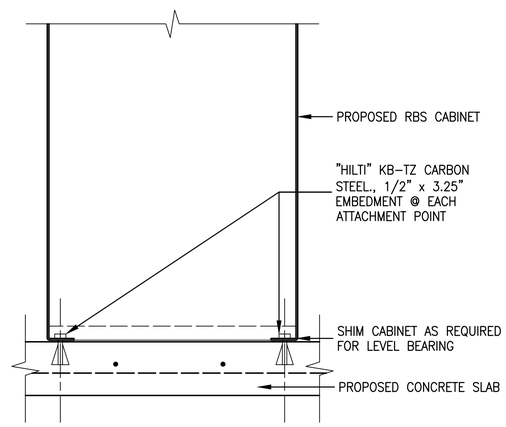

7 A4.1 PROPOSED CABINET ANCHORAGE DETAIL
SCALE: 1-1/2" = 1'-0"

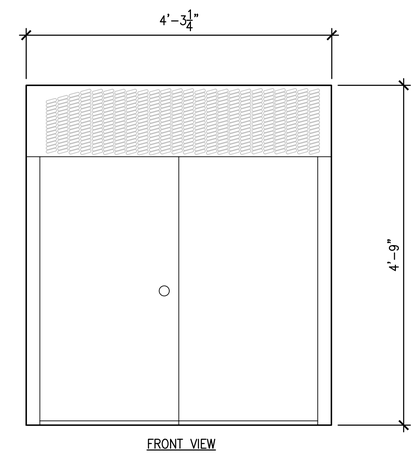

FRONT VIEW

5 A4.1 PROPOSED RBS 6102 ELEVATIONS
SCALE: 1" = 1'-0"

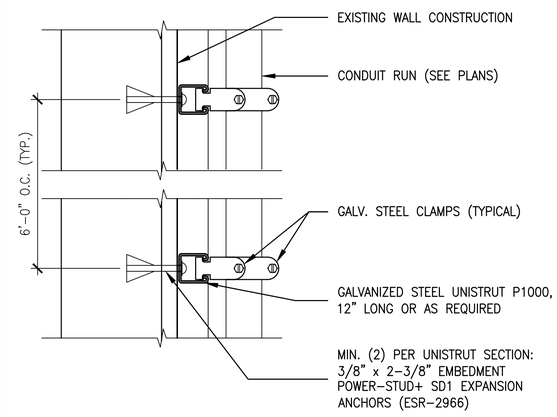

2 A4.1 CONDUIT ATTACHMENT TO WALL (HORIZ OR VERT)
SCALE: 3" = 1'-0"

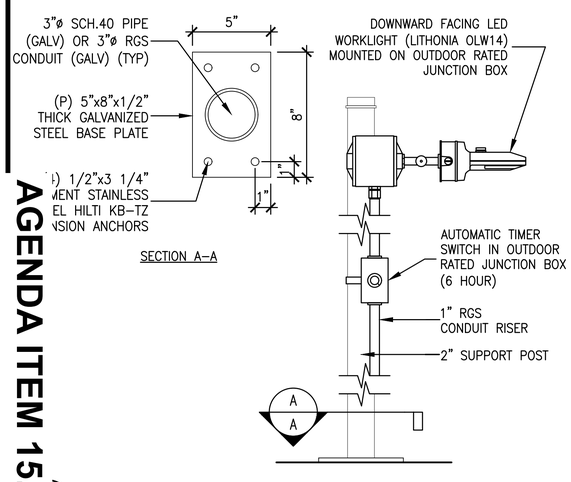

1 A4.1 WORKLIGHT DETAIL
SCALE: NO SCALE

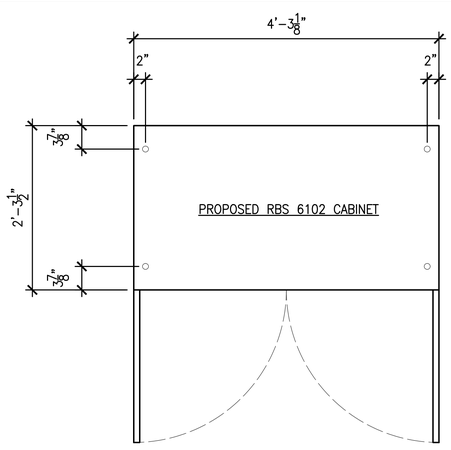

6 A4.1 PROPOSED RBS 6102 ANCHORAGE LAYOUT
SCALE: 1" = 1'-0"

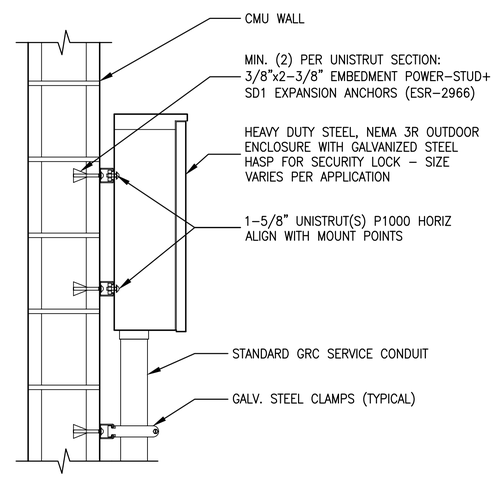

4 A4.1 UTILITY BOX MOUNTING DETAIL
SCALE: 1-1/2" = 1'-0"

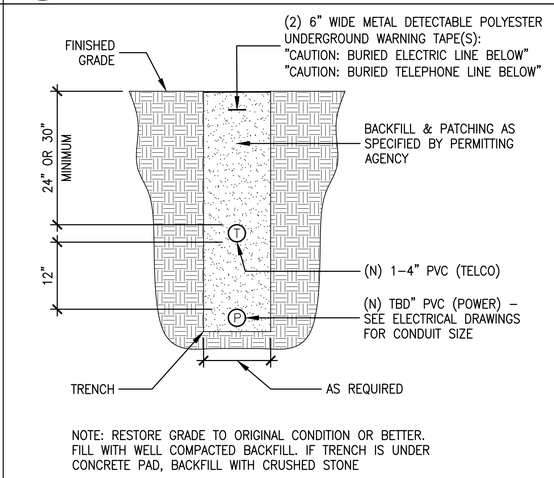

NOTE: RESTORE GRADE TO ORIGINAL CONDITION OR BETTER. FILL WITH WELL COMPACTED BACKFILL. IF TRENCH IS UNDER CONCRETE PAD, BACKFILL WITH CRUSHED STONE

1 A4.1 JOINT POWER/TELCO/FIBER TRENCH DETAIL
SCALE: NONE

AGENDA ITEM 15.2

CROWN CASTLE
MST ARCHITECTS WIRELESS DIVISION
1520 River Park Drive, Sacramento, CA 95815
916-567-9630
www.MSTArchitects.com

THESE DRAWINGS AND SPECIFICATIONS AS INSTRUMENTS OF SERVICE, ARE AND SHALL REMAIN THE PROPERTY OF MARVEL S. TSIKAS, ARCHITECT, INC., WHETHER THE PROJECT FOR WHICH THEY ARE MADE EXISTS OR NOT. THESE DRAWINGS AND SPECIFICATIONS ARE NOT TO BE USED BY ANY PERSON OR ENTITY FOR OTHER PROJECTS, OR EXTENSIONS TO THIS PROJECT, EXCEPT BY WRITTEN CONSENT OF THE ARCHITECT. COPYRIGHT, MARVEL S. TSIKAS, ARCHITECT, INC. ALL RIGHTS RESERVED.

T-Mobile WEST LLC.
BU877165 - CORDOVA LANE
SC40175A - NSD PROJECT
10653 COLOMA ROAD
RANCHO CORDOVA, CA 95670

SHEET TITLE: CONSTRUCTION DETAILS

LICENSED ARCHITECT
MARVEL S. TSIKAS
C-28021
Exp. 08-19
STATE OF CALIFORNIA
SIGNED: 07/10/19

Revisions:
1 --
2 --
3 --
4 --
5 --

File:213.0870_A41.dwg
Drawn By: CTC
Checked By: SV
Scale: AS NOTED
Date: 07/10/2019

Job No. 213.0870

A4.1

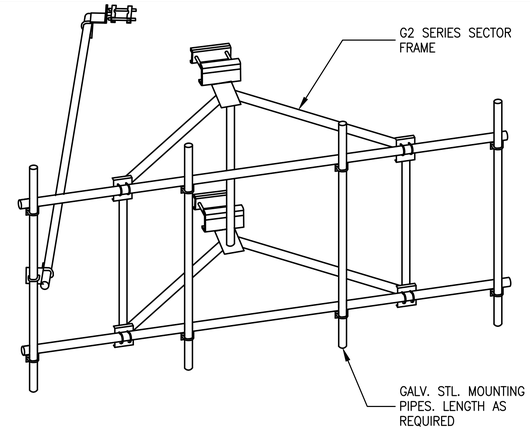

9 A4.2 COMMSCOPE G2 SERIES SECTOR FRAME
SCALE: 1/2" = 1'-0"

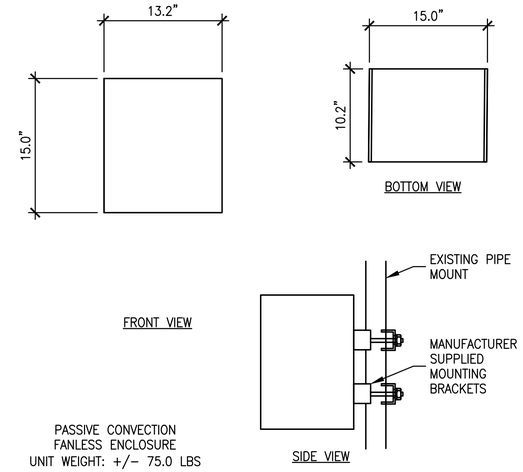

6 A4.2 RRH UNIT (RADIO 4449) MOUNTING DETAIL
SCALE: 1-1/2" = 1'-0"

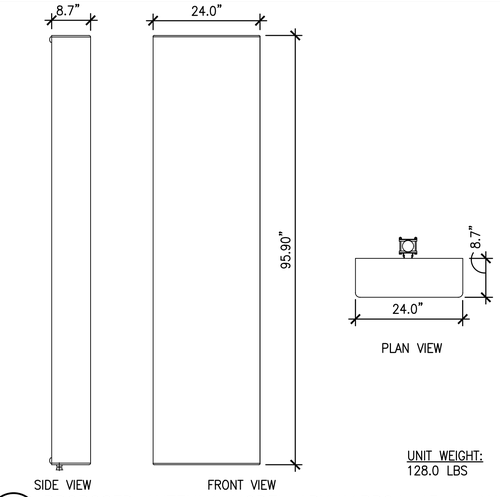

3 A4.2 PROPOSED ANTENNA MODEL APXVAARR24_43-U-NA20
SCALE: 3/4" = 1'-0"

ITEM	PART NO.	DESCRIPTION	QTY.	WEIGHT
1	MCRM1030403	1030-4 Ringmount Weldment	4	24.82 LBS
2	MT-384-20	3/4" X 20" GALV THREADED ROD	8	2.48 LBS
3	GWL-06	3/4" GALV LOCK WASHER	16	0.09 LBS
4	GN-06	3/4" GALV HEX NUT	16	0.33 LBS

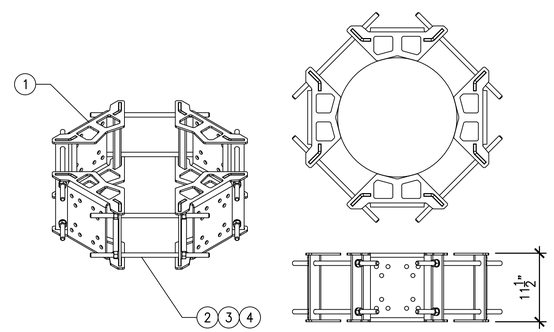

8 A4.2 QUAD UNIVERSAL RING MOUNT DETAIL
COMMSCOPE PART #: MC-RM1030-4
SCALE: 1" = 1'-0"

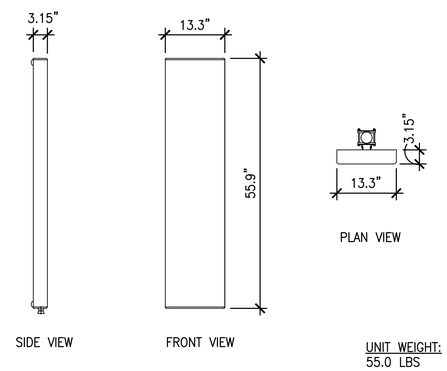

5 A4.2 PROPOSED ANTENNA MODEL APX16DWV-16DWV-S-E-A20
SCALE: 3/4" = 1'-0"

AIR 3246 B66 - KEY DATA
SIZE - HxWxD = 1490x400x240mm (58.6"x15.7"x9.4")
WEIGHT - 90kg (198.4 LBS) W/ MOUNTING BRACKETS - 98kg (216 LBS)

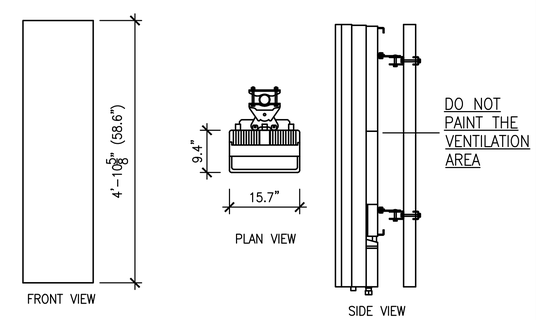

2 A4.2 NEW ANTENNAS AIR32 B66
SCALE: 3/4" = 1'-0"

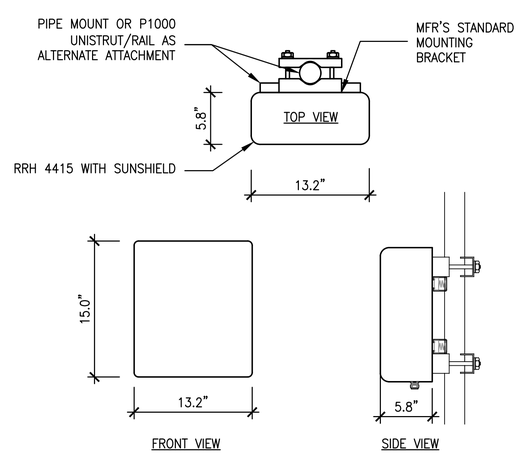

7 A4.2 RRH UNIT (RADIO 4415) MOUNTING DETAIL
SCALE: 1-1/2" = 1'-0"

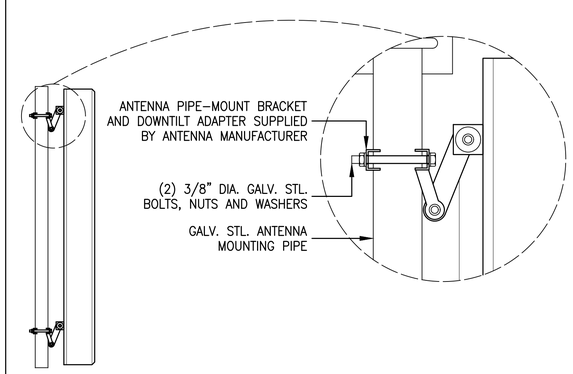

4 A4.2 ANTENNA MOUNT DETAIL
SCALE: 1/2"=1'-0"

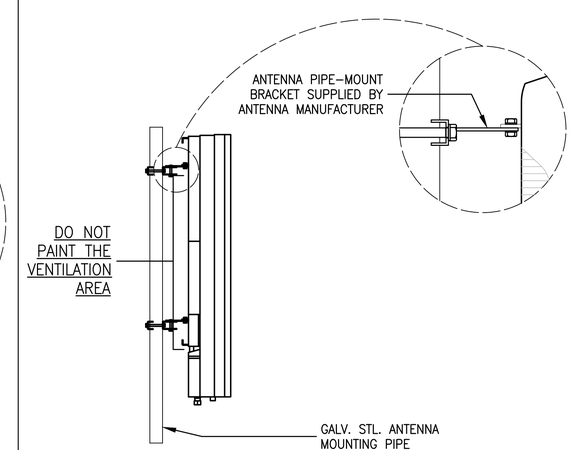

1 A4.2 PROPOSED ANTENNA MOUNTING DETAIL
SCALE: 3/4" = 1'-0"

MST ARCHITECTS
WIRELESS DIVISION
1520 River Park Drive, Sacramento, CA 95815
916-567-9630
www.MSTArchitects.com

THESE DRAWINGS AND SPECIFICATIONS AS INSTRUMENTS OF SERVICE, ARE AND SHALL REMAIN THE PROPERTY OF MARVEL S. TOMAS, ARCHITECT, INC. WHETHER THE PROJECT FOR WHICH THEY ARE MADE IS EXECUTED OR NOT. THE REPRODUCTION, PUBLICATION OR USE BY OTHERS IN WHOLE OR IN PART, WITHOUT THE WRITTEN CONSENT OF THE ARCHITECT, COPYRIGHT, MARVEL S. TOMAS, ARCHITECT, INC. ALL RIGHTS RESERVED.

CROWN CASTLE

T-Mobile WEST LLC.

BU877165 - CORDOVA LANE
SC40175A - NSD PROJECT
10653 COLOMA ROAD
RANCHO CORDOVA, CA 95670

SHEET TITLE: CONSTRUCTION DETAILS

LICENSED ARCHITECT
MARVEL S. TOMAS III
No. C-28021
Exp. 08-19
STATE OF CALIFORNIA
SIGNED: 07/10/19

Revisions:
△ --
△ --
△ --
△ --
△ --

File:213.0870_A41.dwg
Drawn By: CTC
Checked By: SV
Scale: AS NOTED
Date: 07/10/2019

Job No. 213.0870

A4.2

Automatic Transfer Switches
100 - 400 Amps, 600 VAC

- **Standard time delay neutral will reduce switchover problems.**
- **Logic control with inphase monitor regulates switch functions and allows adjustable switch settings with LED indicators.**
- **Control switches located on the front of the door for ease of operation.**
- **All switches are UL 1008 listed and CSA certified.**
- **Electrically-operated, mechanically-held contacts for fast, positive connections.**
- **Rated for all classes of load, 100% equipment rated, both inductive and resistive with no derations.**
- **2, 3, and 4 Pole 600 VAC contactors.**
- **160 millisecond transfer time.**

Standard Features
- Single coil design, electrically operated and mechanically held
- Programmable exerciser
- SPDT auxiliary contacts
- Main contacts are silver alloy to resist welding and sticking
- Conformal coating protects all printed circuit boards
- Indicating LED's for switch position—Normal, Emergency, and Standby Operating
- NEMA 1 enclosure with hinged door and key-locking handle
- Three-position switch—Fast Test, Auto, Normal Test
- Arc chutes on main contacts

tional Accessories
- NEMA 12 enclosure
- NEMA 3R enclosure
- NEMA 4 & 4X enclosure
- Exterior AC meter package
- Controls accessible through door in door design on NEMA type 3R and 4 enclosures – key lock provided on access door
- 4-pole design for neutral isolation
- Two (2) sets of auxiliary contacts
- Preferred source selector switch
- Manual 3 position selector switch
- Remote automatic control circuit
- Signal before transfer contacts
- Return to normal timer bypass

GENERAC®
POWER SYSTEMS, INC.
GENERAC POWER SYSTEMS, INC. • P.O. BOX 8 • WALKESHA, WI 53187
262/544-4811 • FAX 262/544-4851

GTS Control Systems

Utility Voltage	LOGIC CONTROL w / Inphase Monitor
Dropout	75-95% (Adj.)
Pickup	85-95% (Adj.)
Line Interrupt	0.1-10 Sec. (Adj.)
Engine Minimum Run	5-30 Min. (Adj.)
Engine Warmup	5 Sec.-3 Min. (Adj.)
Return to Utility	1-30 Min. (Adj.)
Engine Cooldown	1-30 Min. (Adj.)
Standby Voltage	85-95% (Adj.)
Standby Frequency	80-90% (Adj.)
Time Delay Neutral	0.1-10 Sec. (Adj.)
Transfer on Exercise	On/Off Switch
Warmup Timer Bypass	On/Off Switch
Time Delay Neutral Bypass	On/Off Switch
Inphase Monitor	On/Off Switch

Withstand Current - 600 Volt GTS Series

GTS Rated Amps	100	150	200	300	400
FUSE PROTECTED					
Maximum RMS Symmetrical Fault Current – Amps	200,000	200,000	200,000	200,000	200,000
Maximum Fuse Size – Amps	200	400	400	600	600
Fuse Class	J,T	J,T	J,T	J,T	J,T
CIRCUIT BREAKER PROTECTED					
Maximum RMS Symmetrical Fault Current – Amps	14,000	25,000	25,000	35,000	35,000
Protective Device Continuous Rating (Max) – Amps	150	300	300	600	600

* Tested in accordance with the withstand and closing requirements of UL 1008 and CSA Standards
* Current ratings are listed @ 480 VAC

Unit Dimensions

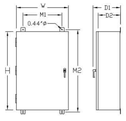

CTS Rated Amps	Voltage	Enclosure Height H	Enclosure Width W	Wall Mount Bolt Pattern M1	Wall Mount Bolt Pattern M2	Enclosure Depth D1	Enclosure Depth D2	Weight (lbs.)
100	600	36	24	18	37.5	12.7	10	185
150-200	120/240	36	24	18	37.5	12.7	10	185
150-200	120/208	36	24	18	37.5	12.7	10	185
150-200	277/480	48"	30"	24	49.5	14.8	12	265
150-200	600	48"	30"	24	49.5	14.8	12	265
300-400	120/240	36	24	18	37.5	12.7	10	245
300-400	120/208	36	24	18	37.5	12.7	10	245
300-400	277/480	48"	30"	24	49.5	14.8	12	325
300-400	600	48"	30"	24	49.5	14.8	12	325

* Note: On NEMA 1 enclosures only, door overlaps enclosure – door dimensions are 48.8 H X 30.8 W. All dimensions in inches.

Terminal Lug Wire Ranges

GTS Rated Amps	Contactor Terminals (1 Lug Per Pole) Lug Wire Range	Neutral Bar # Lugs	Neutral Bar Lug Wire Range	Ground Lug (1 Provided) Lug Wire Range
100	2/0 – 14AWG	4	3/0 – 14AWG	3/0 – 14 AWG
150	400MCM – 4 AWG	4	350MCM – 6AWG	350MCM – 6 AWG
200	400MCM – 4 AWG	4	350MCM – 6AWG	350MCM – 6 AWG
300	600MCM – 4 AWG	4	600MCM – 4 AWG	350MCM – 6 AWG
	[250MCM – 1/0 AWG] **		[250MCM – 1/0 AWG]**	350MCM – 6 AWG
400	600MCM – 4 AWG	4	600MCM – 4 AWG	350MCM – 6 AWG
	[250MCM – 1/0 AWG]		[250MCM – 1/0 AWG]**	

Bulletin 0947000005 / Printed in USA 11.07 rev. 06.03

2 A5.1 AUTOMATIC TRANSFER SWITCH
SCALE: 1/4" = 1'-0"

RD025 | 2.2L | 25kW
INDUSTRIAL DIESEL GENERATOR SET
EPA Certified Stationary Emergency

GENERAC | INDUSTRIAL POWER

Standby Power Rating
25 kW, 31.25 kVA, 60 Hz

Image used for illustration purposes only

CODES AND STANDARDS
Not all codes and standards apply to all configurations. Contact factory for details.

- UL2200, UL508, UL489, UL142
- CSA C22.2
- BS5514 and DIN 6271
- SAE J1349
- NFPA 37, 70, 99
- ISO 3046, 8528, 9001
- NEMA ICS1, ICS10, MG1, 250, ICS6, AB1
- ANSI/IEEE C62.41

POWERING AHEAD

For over 50 years, Generac has led the industry with innovative design and superior manufacturing. Generac ensures superior quality by designing and manufacturing most of its generator components, including alternators, enclosures and base tanks, control systems and communications software.

Generac's gensets utilize a wide variety of options, configurations and arrangements, allowing us to meet the standby power needs of practically every application. Generac searched globally to ensure the most reliable engines power our generators. We choose only engines that have already been proven in heavy-duty industrial application under adverse conditions.

Generac is committed to ensuring our customers' service support continues after their generator purchase.

SPEC SHEET 1 OF 6

RD025 | 2.2L | 25kW
INDUSTRIAL DIESEL GENERATOR SET
EPA Certified Stationary Emergency

GENERAC | INDUSTRIAL POWER

STANDARD FEATURES

ENGINE SYSTEM
- Cold Weather Kit
- Oil Drain Extension
- Fan Guard
- Factory Filled Oil and Coolant

GENERATOR SET
- Sound Attenuated Aluminum Enclosure
- Internal Genset Vibration Isolation
- Separation of Circuits - High/Low Voltage
- Wrapped Exhaust Piping
- Standard Factory Testing
- 5 Year Limited Warranty
- Ready to Accept Full Load in <10 Seconds
- E-Stop

ENCLOSURE
- Lockable Doors
- Rust Proof Hardware
- RhinoCoat™ Textured Polyester Powder Coat

Electrical System
- Battery Charging Alternator
- Battery Cables
- Battery Tray
- Rubber-Booted Engine Electrical Connections
- Solenoid Activated Starter Motor
- Smart Battery Charger
- Battery Disconnect

ALTERNATOR SYSTEM
- 2/3 Pitch
- Skewed Stator
- Sealed Bearings
- Low Temperature Rise (<120°C)
- Low THD (<5%)

Cooling System
- Closed Coolant Recovery System
- Factory-Installed Radiator
- 50/50 Ethylene Glycol Antifreeze
- Radiator Drain Extension
- Can Operate at up to 122°F (50°C) Ambient Temperature

Fuel System
- Fuel Lockoff Solenoid
- Primary Fuel Filter
- Stainless Steel Fuel Lines

TANKS
- 48 Hour Run Time
- UL142 Listed
- Lockable Fuel Cap

CONTROL SYSTEM

Evolution™ Controller
- Two-Line Plain Text LCD Display
- Programmable Start Delay Between 10-305seconds
- 10 Second Engine Start Sequence
- 5 Second Engine Warm Up
- 1 Minute Engine Cool-Down
- Starter Lock-Out
- Smart Battery Charger
- Automatic Voltage Regulation with Over and Under Protection
- Automatic Low Oil Pressure Shutdown
- Overspeed Shutdown
- High Temperature Shutdown
- Overcrank Protection
- Safety Fused
- Failure to Transfer Protection
- Low Battery Protection
- 50 Event Run Log
- Future Set Capable Exerciser
- Incorrect Wiring Protection
- Internal Fault Protection
- Common External Fault Capability
- Governor Failure Protection
- OBD2 Diagnostic Port.

Alarms
- Door Open
- Low Fuel
- Generator Running
- Not in Auto
- Common Shutdown

OPTIONAL SHIPPED LOOSE AND FIELD INSTALL KITS

GENERATOR SET
- Paint Kit
- Scheduled Maintenance Kit

TANKS
- Fuel Fill Drop Tube
- Spill Box
- 90% Fuel Alarm
- Tank Risers
- Spill Box Drainback Kit
- Vent Extension Support Kit
- 5 Day Run Time
- Overfill Prevention Valve

SPEC SHEET 2 OF 6

RD025 | 2.2L | 25kW
INDUSTRIAL DIESEL GENERATOR SET
EPA Certified Stationary Emergency

GENERAC | INDUSTRIAL POWER

DIMENSIONS AND WEIGHTS*

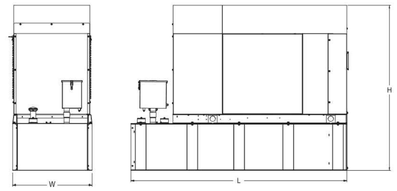

Enclosed Unit with Extended Run Tank (211 Usable Gal)	L x W x H in (mm)	102.6 (2,607) x 35.0 (888) x 90.8 (2,307)
	Sound output in dB(A) at 23ft with generator operating at normal Load	65

* All measurements are approximate and for estimation purposes only.
Drawing is for illustration purposes only, not to scale.

YOUR FACTORY RECOGNIZED GENERAC INDUSTRIAL DEALER

Specification characteristics may change without notice. Dimensions and weights are for preliminary purposes only. Please consult a Generac Power Systems Industrial Dealer for detailed installation drawings.

SPEC SHEET 5 OF 6

RD025 | 2.2L | 25kW
INDUSTRIAL DIESEL GENERATOR SET
EPA Certified Stationary Emergency

GENERAC | INDUSTRIAL POWER

APPLICATION AND ENGINEERING DATA

ENGINE SPECIFICATIONS

General	
Make	Perkins
EPA Emission Compliance	Stationary Emergency
Cylinder #	4
Type	In-Line
Displacement - in³ (L)	135.2 (2.216)
Bore - in (mm)	3.30 (84.0)
Stroke - in (mm)	3.94 (100.0)
Compression Ratio	21.3:1
Intake Air Method	Turbocharged/Aftercooled
Piston Type	Aluminum Alloy
Crankshaft Type	Cast Iron OHV
Engine Block Type	Aluminum
Engine Governing	
Governor	Electronic
Frequency Regulation (Steady State)	±0.25%
Lubrication System	
Oil Pump Type	Gear
Oil Filter Type	Full Flow Spin-On Canister
Crankcase Capacity - L (qts)	10.6 (11.2)

Cooling System	
Cooling System Type	Pre-Lubed, Self-Sealing
Fan Type	Pusher
Fan Speed (rpm)	1,980
Fan Diameter - mm (in)	18.0 (457.2)
Fuel System	
Fuel Type	Ultra Low Sulfur Diesel Fuel
Fuel Specification	ASTM
Fuel Pump Type	Mechanical Engine Driven Gear
Injector Type	Mechanical
Fuel Supply Line (mm/in)	7.940/.31 (ID)
Fuel Return Line (mm/in)	4.76/0.19 (ID)
Fuel Filtering (microns)	25
Engine Electrical System	
System Voltage	12 VDC
Battery Charger Alternator	Standard
Battery Size	Group 27F
Battery Voltage	12 VDC
Ground Polarity	Negative

ALTERNATOR SPECIFICATIONS

Standard Model	Generac
Poles	4
Field Type	Rotating
Insulation Class - Rotor	F
Insulation Class - Stator	H
Total Harmonic Distortion	<5%
Telephone Interference Factor (TIF)	<50
Standard Excitation	Direct
Bearings	Sealed Ball
Coupling	Flexible Disc
Prototype Short Circuit Test	Yes
Voltage Regulator Type	Full Digital
Regulation Accuracy (Steady State)	±1.0%

SPEC SHEET 3 OF 6

RD025 | 2.2L | 25kW
INDUSTRIAL DIESEL GENERATOR SET
EPA Certified Stationary Emergency

GENERAC | INDUSTRIAL POWER

OPERATING DATA

POWER RATINGS

	Standby	
Single-Phase 120/240 VAC @1.0pf	25 kW	Amps: 104

MOTOR STARTING CAPABILITIES (sKVA)

sKVA vs. Voltage Dip at 30%	
120/240 V, Single-Phase at 0.4pf	168

FUEL CONSUMPTION RATES*

Percent Load	Diesel gal/hr (L/hr)	Run Hours with Standard Tank
25%	0.85	249
50%	1.29	164
75%	1.65	127
100%	2.10	100

* Fuel supply installation must accommodate fuel consumption rates at 100% load.

COOLING

		Standby
Air Flow (Radiator and Alternator)	cfm (m³/min)	2,800 (79)
Coolant System Capacity	gal (l)	2.5 (9.5)
Heat Rejection to Coolant	BTU/hr (MJ/hr)	11,085 (117)
Temperature Deration		3% for every 5°C above 25°C or 1.7% for every 5°F over 77°F
Altitude Deration		1% for every 100 m above 915 or 3% for every 1,000 ft over 3,000 ft
Maximum Radiator Backpressure	in H_2O	0.5

COMBUSTION AIR REQUIREMENTS

	Standby
Flow at Rated Power cfm (m³/min)	67.8 (2.5)

ENGINE

		Standby
Rated Engine Speed	rpm	1,800

EXHAUST

		Standby
Exhaust Flow (Rated Output)	cfm (m³/min)	268.4 (7.6)
Exhaust Temp (Rated Output - Post Silencer)	°F (°C)	865 (463)

Deration – Operational characteristics consider maximum ambient conditions. Derate factors may apply under atypical site conditions.
Please consult a Generac Power Systems Dealer for additional details. All performance ratings in accordance with ISO3046, 8528TA, ISO8528 and DIN6271 standards.

SPEC SHEET 4 OF 6

1 A5.1 STANDBY GENERATOR SPECIFICATION SHEETS
SCALE: NONE

MST ARCHITECTS
WIRELESS DIVISION
1520 River Park Drive, Sacramento, CA 95815
916-567-9630
www.MSTArchitects.com

CROWN CASTLE

THESE DRAWINGS AND SPECIFICATIONS & INSTRUMENTS OF SERVICE, AS AND SHALL REMAIN THE PROPERTY OF MARK S. TOMAS, ARCHITECT, INC., WHETHER THE PROJECT FOR WHICH THEY WERE MADE IS EXECUTED OR NOT. THE REPRODUCTION, ALTERATION, OR USE FOR ANY OTHER PROJECT WITHOUT WRITTEN CONSENT OF THE ARCHITECT. COPYRIGHT, MARK S. TOMAS, ARCHITECT, INC. ALL RIGHTS RESERVED.

T-Mobile
WESTLLC.

BU877165 – CORDOVA LANE
SC40175A – NSD PROJECT
10653 COLOMA ROAD
RANCHO CORDOVA, CA 95670

SHEET TITLE: STANDBY GENERATOR SPECIFICATION SHEETS

LICENSED ARCHITECT
DANIEL S. TOMAS
No. C-28021
Exp. 06-19
STATE OF CALIFORNIA
Not valid unless signed & sealed.

Revisions:
1 --
2 --
3 --
4 --
5 --

File: 213.0870_A51.dwg
Drawn By: CTC
Checked By: SV
Scale: AS NOTED
Date: 07/10/2019

Job No. 213.0870

A5.1

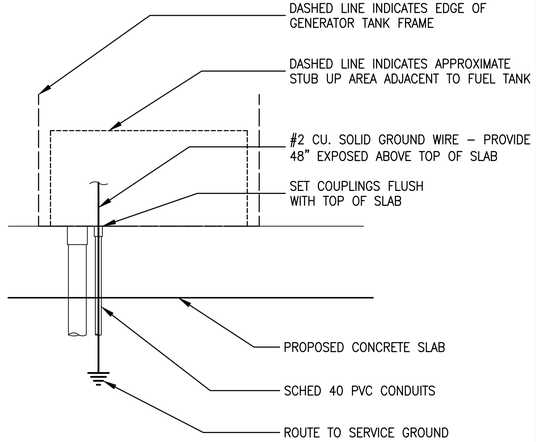

3 / A5.2 SECTION @ CONDUIT STUB UP
SCALE: 1" = 1'-0"

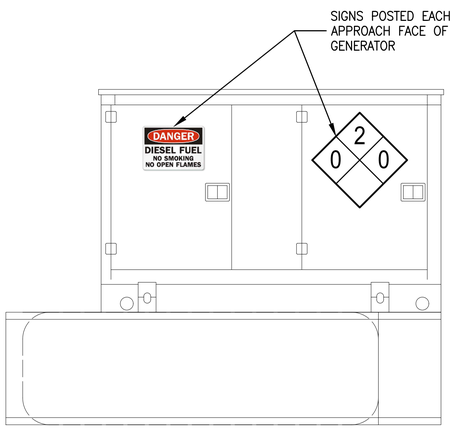

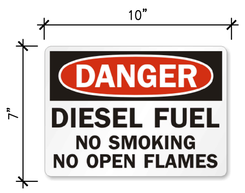

10"X14" ALUMINUM NO SMOKING SIGN

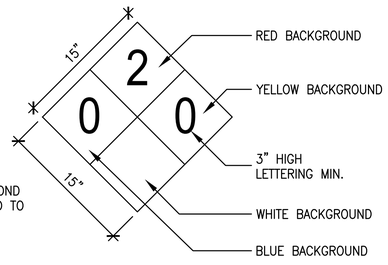

PA 704 DIAMOND
BE MOUNTED TO
SIDES OF
NERATOR

GENERATOR SAFETY SIGNAGE
SCALE: NONE

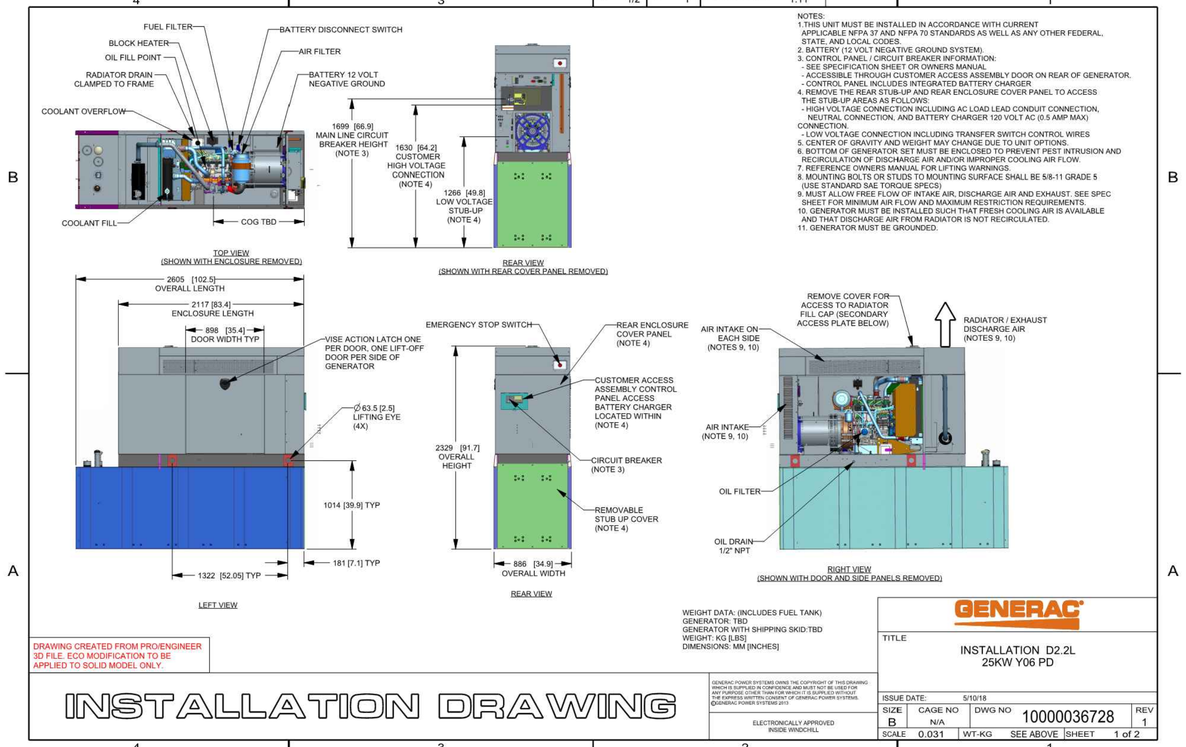

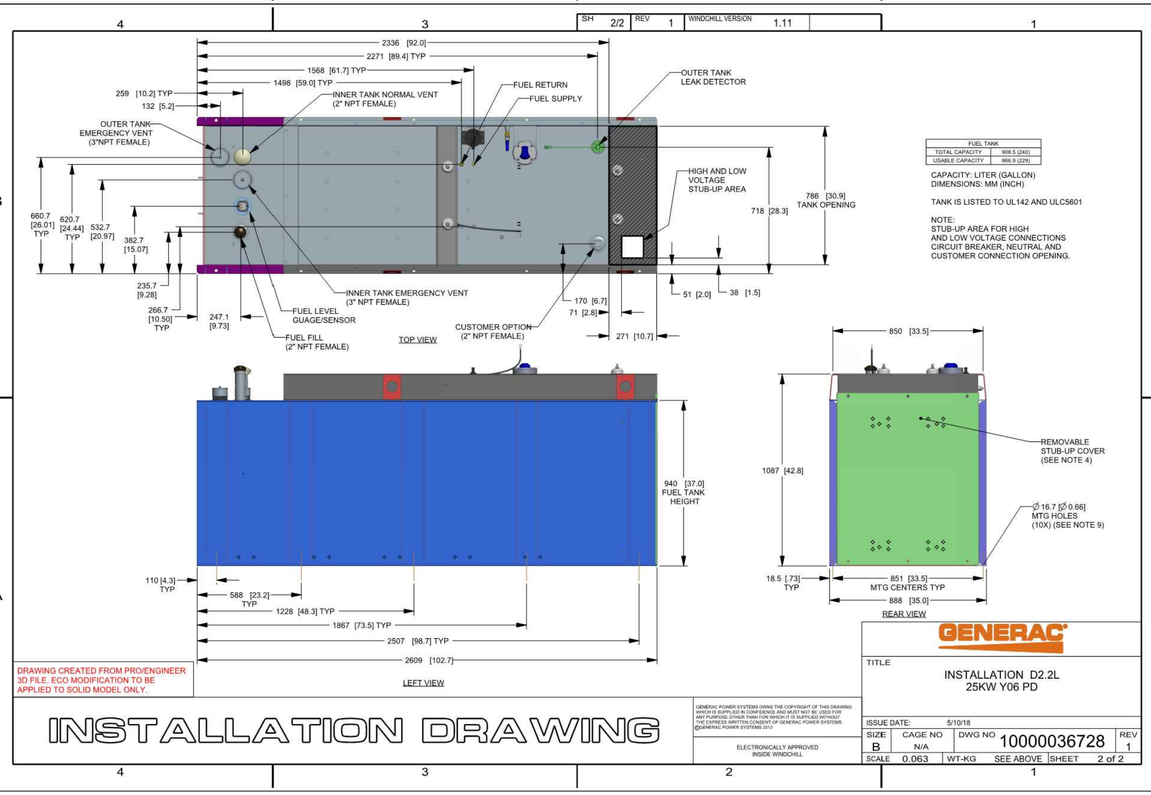

1 / A5.2 STANDBY GENERATOR INSTALLATION DETAIL
SCALE: NONE

MST ARCHITECTS WIRELESS DIVISION
1520 River Park Drive, Sacramento, CA 95815
916-567-9630
www.MSTArchitects.com

CROWN CASTLE

THESE DRAWINGS AND SPECIFICATIONS AS INSTRUMENTS OF SERVICE, ARE AND SHALL REMAIN THE PROPERTY OF MARVEL S. TSIKAS, ARCHITECT, INC., WHETHER THE PROJECT FOR WHICH THEY WERE MADE IS EXECUTED OR NOT. THE REPRODUCTION, ALTERATION, OR USE FOR ANY OTHER PROJECT BY ANYONE WITHOUT WRITTEN CONSENT OF THE ARCHITECT. COPYRIGHT, MARVEL S. TSIKAS, ARCHITECT, INC. ALL RIGHTS RESERVED.

T-Mobile WEST LLC.

BU877165 – CORDOVA LANE
SC40175A – NSD PROJECT
10653 COLOMA ROAD
RANCHO CORDOVA, CA 95670

SHEET TITLE: STANDBY GENERATOR INSTALLATION DETAILS

LICENSED ARCHITECT
MARVEL S. TSIKAS
No. C-28021
Exp. 08-19
STATE OF CALIFORNIA
Not valid unless signed SIGNED by 02/06/18

Revisions:
1 --
2 --
3 --
4 --
5 --

File:213.0870_A52.dwg
Drawn By: CTC
Checked By: SV
Scale: AS NOTED
Date: 07/10/2019

Job No. 213.0870

A5.2

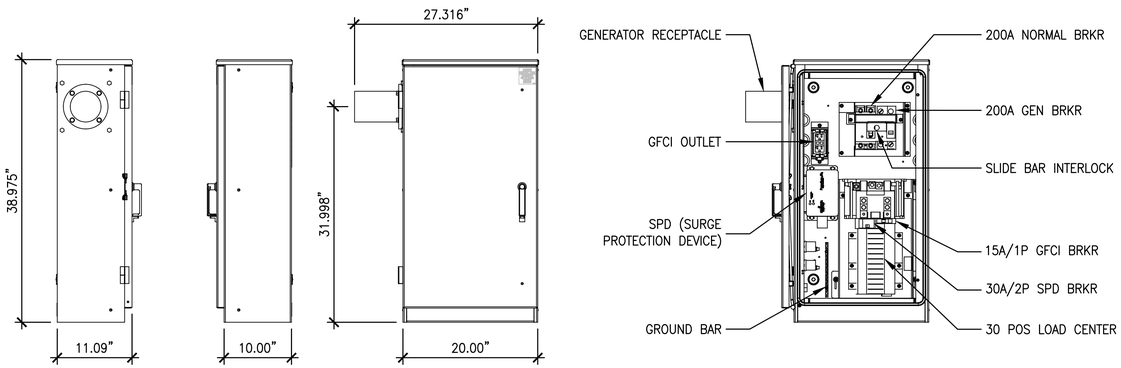

3 / E1.1 POWER DISTRIBUTION PANEL
SCALE: NONE

PANEL CIRCUIT AND LOAD SCHEDULE — **DESIGNATION: PANEL "T-Mobile"**

	LOAD DESCRIPTION	QTY	UNIT VA	LOAD PER PHASE (VA) PHASE A	PHASE B	TRIP	POLES	WIRE		WIRE	POLES	TRIP	LOAD PER PHASE (VA) PHASE A	PHASE B	LOAD UNIT VA	QTY	DESCRIPTION	
1	INTEGRATED SPD	1		0		20	2				1	15	180		180	1	INTEGRATED GFCI	2
3		1			0					12	1	20		100	100	1	LIGHT	4
5	RBS 6102	1	2400	2400		125	2	1		12	1	20	1500		1500	1	GENERATOR HEATER	6
7		1	2400		2400					12	1	20		2040	2040	1	GENERATOR CHARGER	8
9	DELTA CABINET	1	800	800		15	2	12					0					10
11		1	800		800									0				12
13				0									0					14
15					0									0				16
17				0									0					18
19					0									0				20
21				0									0					22
23					0									0				24
25				0									0					26
27					0									0				28
29				0									0					30
			Subtotal	3200	3200								1680	2140	Subtotal			

Voltage:	120/240 1 ph 3w	AIC:	Verify With Servicing Utility	**TOTAL PHASE A (KVA)**	**4.88**
Bus:	200 amps	Main:	LUG	**TOTAL PHASE B (KVA)**	**5.34**
Enclosure:	NEMA 3R Outdoor	Mount:	Surface	**TOTAL KVA =**	**10.22**
				Total Amperage =	**42.58**

2 / E1.1 PANEL SCHEDULE
SCALE: NO SCALE

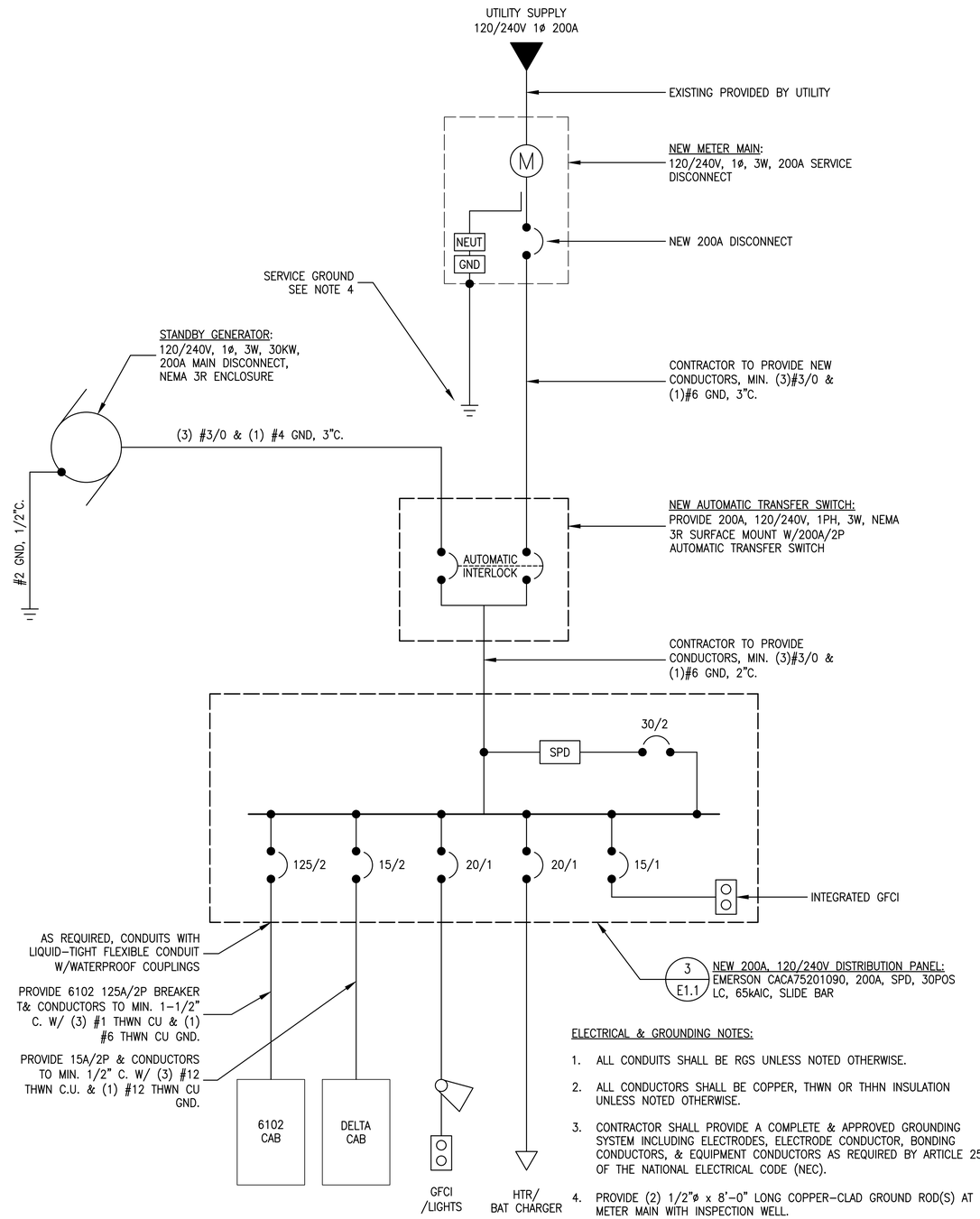

ELECTRICAL & GROUNDING NOTES:

1. ALL CONDUITS SHALL BE RGS UNLESS NOTED OTHERWISE.
2. ALL CONDUCTORS SHALL BE COPPER, THWN OR THHN INSULATION UNLESS NOTED OTHERWISE.
3. CONTRACTOR SHALL PROVIDE A COMPLETE & APPROVED GROUNDING SYSTEM INCLUDING ELECTRODES, ELECTRODE CONDUCTOR, BONDING CONDUCTORS, & EQUIPMENT CONDUCTORS AS REQUIRED BY ARTICLE 250 OF THE NATIONAL ELECTRICAL CODE (NEC).
4. PROVIDE (2) 1/2"ø x 8'-0" LONG COPPER-CLAD GROUND ROD(S) AT METER MAIN WITH INSPECTION WELL.
5. CONDUITS CONNECTED TO EQUIPMENT & DEVICES SHALL BE METALLICALLY JOINED TOGETHER TO PROVIDE EFFECTIVE ELECTRICAL CONTINUITY.
6. FEEDERS & BRANCH CIRCUIT WIRING INSTALLED IN NONMETALLIC CONDUIT SHALL INCLUDE A CODE SIZED GROUNDING CONDUCTOR HAVING GREEN INSULATION. GROUND CONDUCTOR SHALL BE PROPERLY CONNECTED AT BOTH ENDS TO MAINTAIN ELECTRICAL CONTINUITY.
7. ALL GROUNDING CONDUCTORS SHALL BE SOLID TINNED COPPER & ANNEALED #2 AWG UNLESS NOTED OTHERWISE.

1 / E1.1 SINGLE-LINE DIAGRAM
SCALE: NONE

MST ARCHITECTS WIRELESS DIVISION
1520 River Park Drive, Sacramento, CA 95815
916-567-9630
www.MSTArchitects.com

CROWN CASTLE

THESE DRAWINGS AND SPECIFICATIONS AS INSTRUMENTS OF SERVICE, ARE AND SHALL REMAIN THE PROPERTY OF MICHAEL S. TOMAS, ARCHITECT, INC., WHETHER THE PROJECT FOR WHICH THEY ARE MADE IS EXECUTED OR NOT. THE REPRODUCTION, PUBLICATION OR USE OF THESE DRAWINGS AND SPECIFICATIONS BY OTHERS IS PROHIBITED WITHOUT THE WRITTEN CONSENT OF THE ARCHITECT. COPYRIGHT, MICHAEL S. TOMAS, ARCHITECT, INC. ALL RIGHTS RESERVED.

T-Mobile WESTLLC.

BU877165 - CORDOVA LANE
SC40175A - NSD PROJECT
10653 COLOMA ROAD
RANCHO CORDOVA, CA 95670

SHEET TITLE: ELECTRICAL ONE-LINE DIAGRAM, PANEL SCHEDULE

LICENSED ARCHITECT — MICHAEL S. TOMAS — No. C-28021 — Exp. 08-19 — STATE OF CALIFORNIA
SIGNED: 07/10/19

Revisions:
△ --
△ --
△ --
△ --
△ --

File: 213.0870_E11.dwg
Drawn By: CTC
Checked By: ALB
Scale: AS NOTED
Date: 07/10/2019

Job No. 213.0870

E1.1

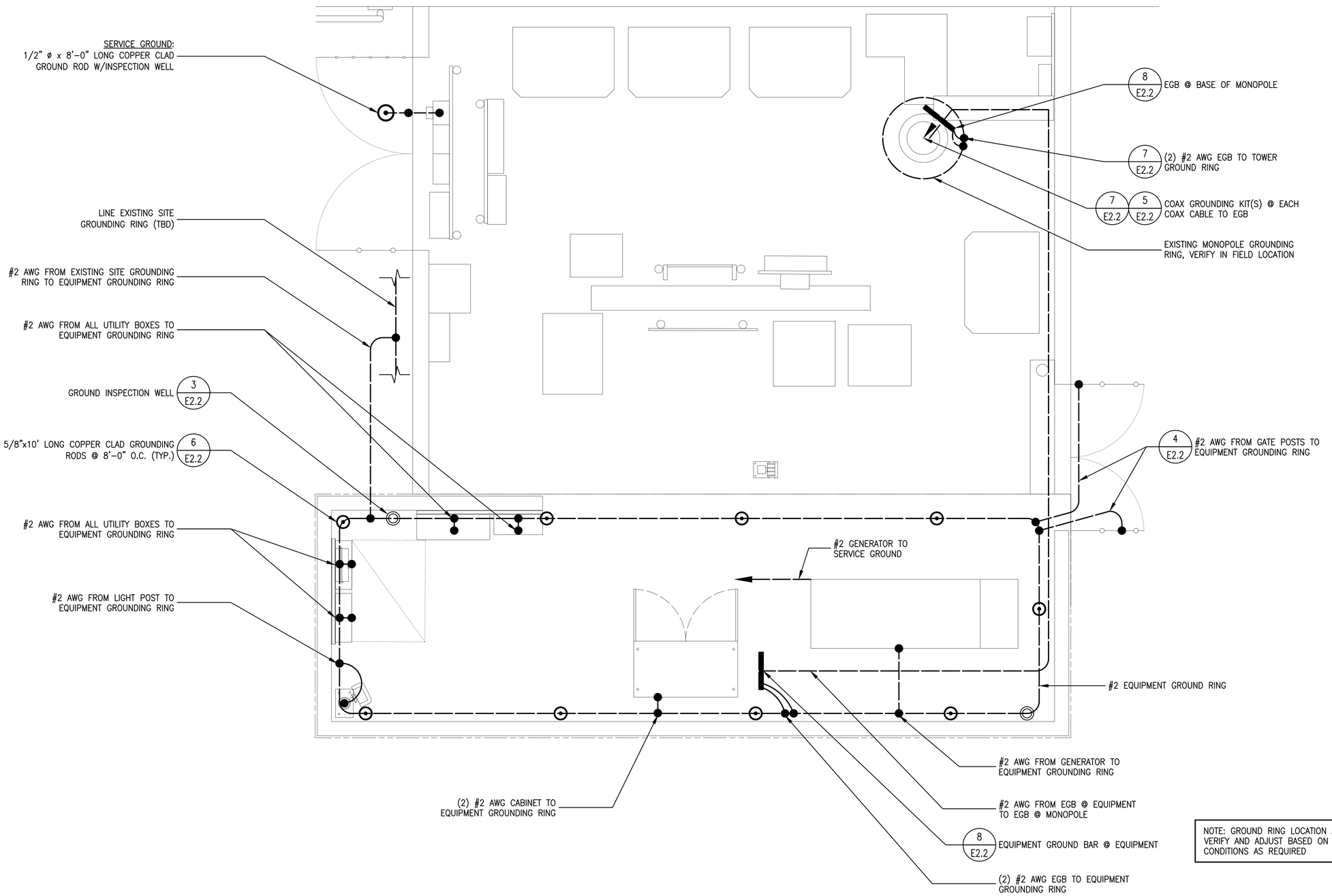

NOTE: GROUND RING LOCATION APPROXIMATE, VERIFY AND ADJUST BASED ON FIELD CONDITIONS AS REQUIRED

1 E2.1 GROUNDING PLAN
SCALE: 1/2" = 1'-0"

MST ARCHITECTS WIRELESS DIVISION
1520 River Park Drive, Sacramento, CA 95815
916-567-9630
www.MSTArchitects.com

THESE DRAWINGS AND SPECIFICATIONS & INSTRUMENTS OF SERVICE, ARE AND SHALL REMAIN THE PROPERTY OF MARVEL S. TOMAS, ARCHITECT, INC. WHETHER THE PROJECT FOR WHICH THEY ARE MADE IS EXECUTED OR NOT. THE REPRODUCTION, PUBLICATION OR USE BY OTHERS IS PROHIBITED WITHOUT THE WRITTEN CONSENT OF THE ARCHITECT. COPYRIGHT, MARVEL S. TOMAS, ARCHITECT, INC. ALL RIGHTS RESERVED.

CROWN CASTLE

T-Mobile WESTLLC.

BU877165 – CORDOVA LANE
SC40175A – NSD PROJECT
10653 COLOMA ROAD
RANCHO CORDOVA, CA 95670

SHEET TITLE: GROUNDING PLAN

LICENSED ARCHITECT
MARVEL S. TOMAS
Lic. C-28021
Exp. 08-19
STATE OF CALIFORNIA
SIGNED: 07/10/19

Revisions:
△ --
△ --
△ --
△ --
△ --

File:213.0870_E21.dwg
Drawn By: CTC
Checked By: SV
Scale: AS NOTED
Date: 07/10/2019

Job No. 213.0870

E2.1

GROUNDING NOTES

1. GROUNDING SHALL COMPLY WITH NEC ART. 250.
2. GROUND COAXIAL CABLE SHIELDS MINIMUM AT BOTH ENDS USING MANUFACTURER'S COAX CABLE GROUNDING KITS SUPPLIED BY PBMS.
3. USE #2 COPPER STRANDED WIRE WITH GREEN COLOR INSULATION FOR ABOVE GRADE GROUNDING (UNLESS OTHERWISE SPECIFIED) AND #2 SOLID TINNED BARE COPPER WIRE FOR BELOW GRADE GROUNDING AS INDICATED ON THE DRAWING.
4. ALL GROUND CONNECTIONS TO BE BURNDY HYGROUND COMPRESSION TYPE CONNECTORS OR CADWELD EXOTHERMIC WELD. DO NOT ALLOW BARE COPPER WIRE TO BE IN CONTACT WITH GALVANIZED STEEL.
5. ROUTE GROUNDING CONDUCTORS ALONG THE SHORTEST AND STRAIGHTEST PATH POSSIBLE, EXCEPT AS OTHERWISE INDICATED. GROUNDING LEADS SHOULD NEVER BE BENT AT RIGHT ANGLE. ALWAYS MAKE AT LEAST 12" RADIUS BENDS. #6 WIRE CAN BE BENT AT 6" RADIUS WHEN NECESSARY.
6. BOND ANY METAL OBJECTS WITHIN 7 FEET OF PBMS EQUIPMENT OR CABINET TO THE MASTER GROUND BAR.
7. CONNECTIONS TO MGB SHALL BE ARRANGED IN THREE MAIN GROUPS: SURGE PRODUCERS (COAXIAL CABLE GROUND KITS, TELCO AND POWER PEDESTAL GROUND OR SURGE PROTECTOR); SURGE ABSORBERS (GROUNDING ELECTRODE RING OR BUILDING STEEL); NON-SURGING OBJECTS (EGB GROUND IN BTS)
8. CONNECTIONS TO GROUND BARS SHALL BE MADE WITH TWO HOLE COMPRESSION TYPE COPPER LUGS AND NO-OX OR EQUIVALENT PLACED BETWEEN CONNECTOR AND GROUND BAR.
9. THE GROUND ELECTRODE SYSTEM SHALL CONSIST OF DRIVEN GROUND RODS UNIFORMLY SPACED AROUND CELL SITE. THE GROUND RODS SHALL BE 5/8"X8'-0" COPPER CLAD STEEL. THE RODS SHALL BE INTERCONNECTED WITH #2 SOLID TINNED COPPER GROUND WIRE BURIED A MINIMUM 2-1/2' BELOW THE SURFACE OF THE SOIL.
10. ALL UNDERGROUND ELECTRODES SHALL BE BONDED TO STEEL REINFORCING EMBEDDED IN THE CONCRETE SLAB AND CONCRETE MONOPOLE FOUNDATION.
11. MUST APPLY BUTYL & ELECTRICAL TAPE OVER COLD SHRINK AT ALL LOCATIONS. FOR WEATHER PROOFING OVER GROUND KITS. MORE BUTYL TAPE MAY NEED TO BE APPLIED THAN WHAT IS PROVIDED WITH THE MFGR. KIT.
12. TEST COMPLETED GROUND SYSTEM AND RECORD RESULTS FOR PROJECT CLOSE-OUT DOCUMENTATION.

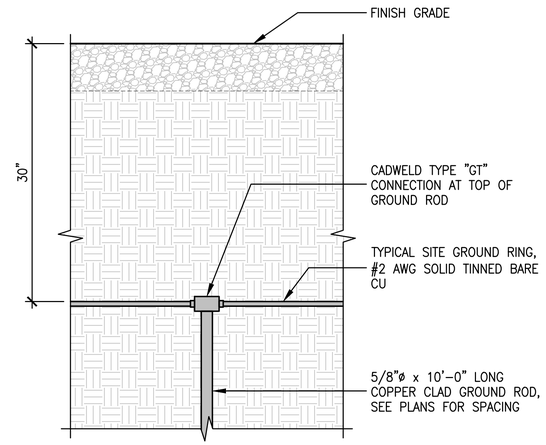

6 E2.2 TYPICAL GROUND ROD
SCALE: 3" = 1'-0"

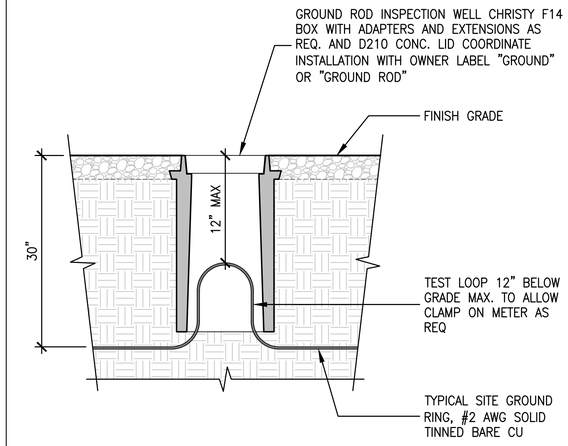

3 E2.2 TYPICAL GROUND RING & INSPECTION WELL DETAIL
SCALE: NOT TO SCALE 1'-0"

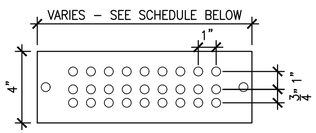

T-MOBILE GALVANIZED STEEL GROUND BAR W/ANTI-THEFT HARDWARE, NON-REMOVABLE PROVIDED BY ELECTRIC MOTION COMPANY	
PART #	BAR DESCRIPTION
EM SGC 49-T-MOBILE-NR	1/4"x4"x9"
EM SGC 412-T-MOBILE-NR	1/4"x4"x12"
EM SGC 418-T-MOBILE-NR	1/4"x4"x18"
EM SGC 420-T-MOBILE-NR	1/4"x4"x20"
EM SGC 424-T-MOBILE-NR	1/4"x4"x24"
INCLUDES TWO STAINLESS STEEL TORQUE SHEAR HEAD BOLTS, W/ANTI LOOSENING COMPOUND GENERAL CONTRACTOR TO STAMP "T-MOBILE" & SITE NUMBER BAR & PAINT ANTI-THEFT COMPOUND PROVIDED BY ELECTRIC MOTION COMPANY, PRODUCT #EM 5101	

8 E2.2 GROUND BAR DETAIL
SCALE: NONE

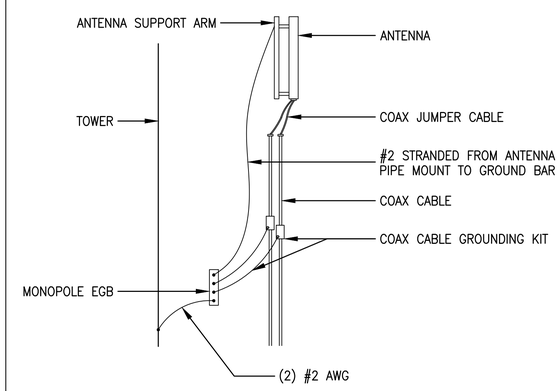

5 E2.2 COAX CONNECTION & GROUNDING DETAIL
SCALE: NONE

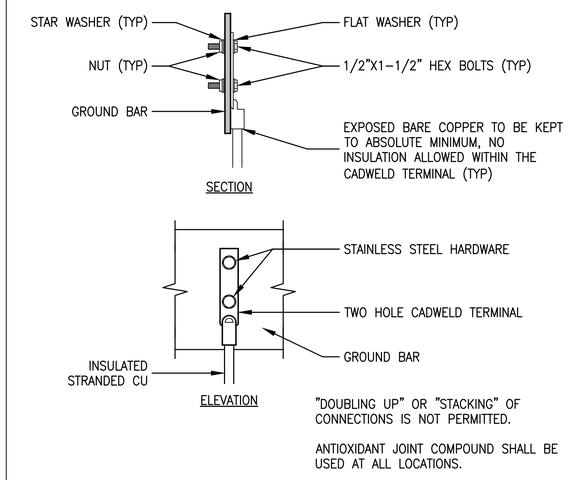

"DOUBLING UP" OR "STACKING" OF CONNECTIONS IS NOT PERMITTED.

ANTIOXIDANT JOINT COMPOUND SHALL BE USED AT ALL LOCATIONS.

2 E2.2 TYPICAL GROUND BAR CONNECTIONS
SCALE: NONE

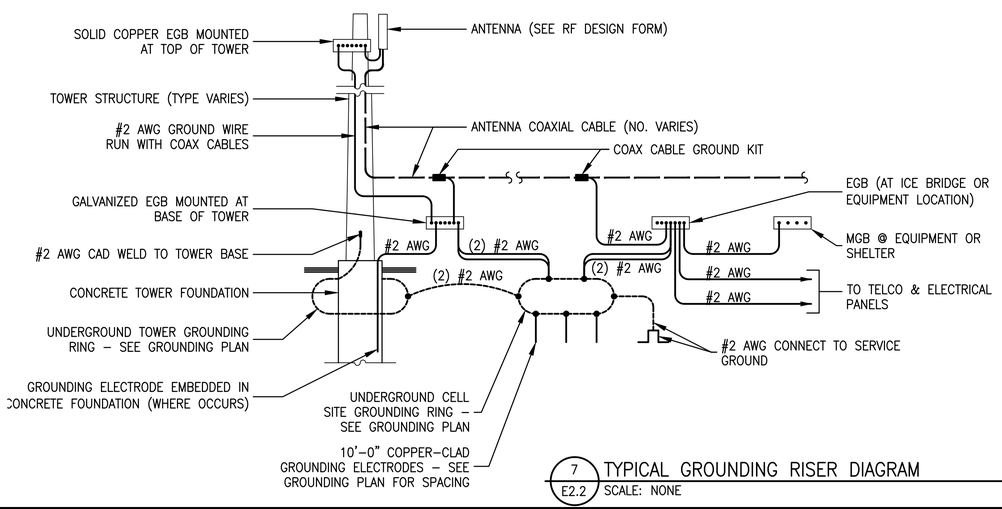

7 E2.2 TYPICAL GROUNDING RISER DIAGRAM
SCALE: NONE

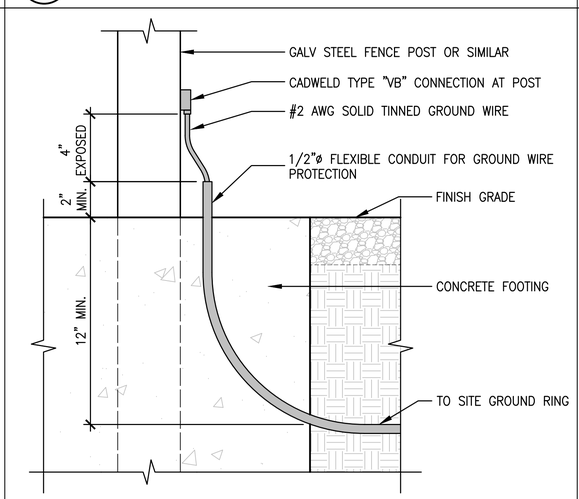

4 E2.2 POST GROUNDING DETAIL
SCALE: 3" = 1'-0"

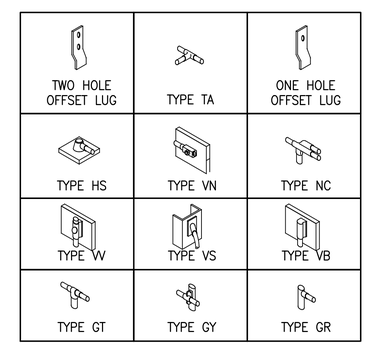

TYPICAL CADWELD CONNECTION TYPES BY "ERICO"

1 E2.2 GROUNDING CONNECTION DETAIL
SCALE: NONE

AGENDA ITEM 15.2

T-Mobile WESTLLC.
BU877165 – CORDOVA LANE
SC40175A – NSD PROJECT
10653 COLOMA ROAD
RANCHO CORDOVA, CA 95670
SHEET TITLE: GROUNDING DETAILS

CROWN CASTLE

MST ARCHITECTS WIRELESS DIVISION
1520 River Park Drive, Sacramento, CA 95815
916-567-9630
www.MSTArchitects.com

THESE DRAWINGS AND SPECIFICATIONS AS INSTRUMENTS OF SERVICE, ARE AND SHALL REMAIN THE PROPERTY OF MARVEL S. TSIKAS, ARCHITECT, INC., WHETHER THE PROJECT FOR WHICH THEY ARE MADE IS EXECUTED OR NOT. THE REPRODUCTION, ALTERATION OR USE OF THESE DRAWINGS AND SPECIFICATIONS WITHOUT THE WRITTEN CONSENT OF THE ARCHITECT, COPYRIGHT, MARVEL S. TSIKAS, ARCHITECT, INC. ALL RIGHTS RESERVED.

LICENSED ARCHITECT MARVEL S. TSIKAS No. C-28021 Exp. 08-19 STATE OF CALIFORNIA
SIGNED: 07/10/19

Revisions:
1 --
2 --
3 --
4 --
5 --

File:213.0870_E22.dwg
Drawn By: CTC
Checked By: SV
Scale: AS NOTED
Date: 07/10/2019

Job No. 213.0870

E2.2

GENERAL STRUCTURAL NOTES

1. ALL NEW WORK SHALL BE IN CONFORMANCE WITH THE 2016 CALIFORNIA BUILDING CODE, CBC, TITLE 24, PART 2
2. FOUNDATION DESIGN PRESSURES PER CHAPTER 18A OF CBC (U.N.O.) :
   A. DL + LL = 1,500 PSF
   B. DL + LL + LATERAL = 2,000 PSF, U.N.O.
3. FOOTINGS SHALL BEAR ON FIRM UNDISTURBED NATIVE SOILS OR ENGINEERED FILL AT OR EXCEEDING DEPTHS SHOWN ON THE DRAWINGS AND IN ACCORDANCE WITH CHAPTER 18 OF THE 2016 CBC
4. CONTRACTOR SHALL VERIFY ALL DIMENSIONS, ELEVATIONS, PROPERTY LINIES, ETC. ON THE JOB
5. CONTRACTOR SHALL NOTIFY THE ARCHITECT WHERE A CONFLICT OCCURS ON ANY OF THE CONTRACT DRAWINGS OR DOCUMENTS. CONTRACTOR IS NOT TO ORDER MATERIAL OR CONSTRUCT ANY PORTION OF THE STRUCTURE THAT IS IN CONFLICT UNTIL CONFLICT IS RESOLVED WITH THE AFFECTED PARTIES

EARTHWORK NOTES

1. CLEARING: REMOVE ALL EXISTING STRUCTURES AND ASSOCIATED FOUNDATIONS, SLABS, FENCING, ASPHALT, CONCRETE, AND INCIDENTAL STRUCTURES AS NECESSARY FOR PROJECT COMPLETION. THE BUILDING AREA SHALL BE STRIPPED OF ALL VEGETATION, TOPSOIL AND DEBRIS.
2. PROOF ROLL THE ENTIRE AREA WITH A JUMPING JACK COMPACTOR (OR EQUAL) TO IDENTIFY THE PRESENCE OF UNSUITABLE FILLS, SOFT SPOTS,OR OTHER UNDESIRABLE MATERIALS OR CONDITIONS. REMOVE SUB-GRADE MATERIALS THAT ARE UNSUITABLE AND REPLACE WITH COMPACTED STRUCTURAL FILL. STRUCTURAL FILL SHOULD BE PLACED BELOW FOOTINGS TO A DEPTH OF 2/3 THE WIDTH OF FOOTING OR A MINIMUM DEPTH OF 2 FT, UNLESS SIGNIFICANT GROUNDWATER IS ENCOUNTERED.
3. COMPACTED STRUCTURAL FILL: ALL FILL MATERIAL SHALL BE A WELL-GRADED GRANULAR MATERIAL WITH A MAXIMUM SIZE LESS THAN 1 INCH AND WITH NOT MORE THAN 15 PERCENT PASSING A NO. 200 SIEVE. IT SHALL BE COMPACTED TO AT LEAST 95 PERCENT OF THE MAXIMUM LABORATORY DENSITY AS DETERMINED BY ASTM D 1557 FOR FILL BENEATH FOOTINGS AND 90 PERCENT FOR FILL BENEATH FLOOR SLABS. ALL FILL SHALL BE TESTED. COMPACTED STRUCTURAL FILL SHALL BE PLACED IN LIFTS NOT EXCEEDING 8 INCHES IN UNCOMPACTED THICKNESS. SHOULD SOFT POCKETS BE ENCOUNTERED IN THE VICINITY OF PROPOSED FOOTINGS OR SLABS THEY SHOULD BE REMOVED TO A DEPTH OF 2 FT. AND REPLACED WITH STRUCTURAL FILL.

CONCRETE NOTES

1. CONCRETE CONSTRUCTION SHALL CONFORM TO ACI-318.
2. CONCRETE FOR SHELTER FOUNDATIONS, EQUIPMENT & GENERATOR SLABS:
   A. MINIMUM COMPRESSIVE STRENGTH OF 3,000 PSI AT 28 DAYS WITH A 4" MAXIMUM SLUMP.
3. CONCRETE FOR FENCE POSTS, H-FRAME POSTS, STOOPS & MISC:
   A. MINIMUM COMPRESSIVE STRENGTH OF 2500 PSI AT 28 DAYS WITH A 4" MAXIMUM SLUMP.
4. REFER TO TOWER DESIGNER FOUNDATION DRAWINGS FOR CONCRETE SPECIFICATIONS FOR TOWER FOUNDATIONS
5. MATERIALS UNLESS NOTED OTHERWISE:
   A. NORMAL WEIGHT AGGREGATES ASTM C 33
   B. REINFORCING STEEL ASTM 615 GRADE 60
   C. TYPE I/II CEMENT COMPLYING WITH ASTM C-150 SHALL BE USED FOR ALL CONCRETE
6. LAP ALL REINFORCING 40 BAR DIAMETERS (24" MINIMUM) UNLESS NOTED OTHERWISE ON DRAWINGS.
7. MAINTAIN MINIMUM 3" COVER AT ALL REINFORCING STEEL UNLESS NOTED OTHERWISE
8. THE CONTRACTOR SHALL BE RESPONSIBLE FOR THE DESIGN, DETAILING, CARE, PLACEMENT AND REMOVAL OF ALL FORM WORK AND SHORES.
   A. SUPPORTING FORMS AND SHORING SHALL NOT BE REMOVED UNTIL STRUCTURAL MEMBERS HAVE ACQUIRED SUFFICIENT STRENGTH TO SAFELY SUPPORT THEIR OWN WEIGHT AND ANY CONSTRUCTION LOAD TO WHICH THEY MAY BE SUBJECTED. IN NO CASE, HOWEVER, SHALL FORMS AND SHORING BE REMOVED IN LESS THAN 24 HOURS AFTER CONCRETE PLACEMENT.
9. CONSTRUCTION JOINTS AND CONTROL JOINTS:
   A. PROVIDE A BEVELED 2 X 4 INTERMEDIATE KEYWAY THAT SHALL BE INSTALLED IN ALL HORIZONTAL AND VERTICAL CONSTRUCTION JOINTS INCLUDING BETWEEN TOP OF FOOTING AND FOUNDATION WALLS. IN ADDITION, ALL JOINTS SHALL BE INTENTIONALLY ROUGHENED TO FULL AMPLITUDE OF APPROXIMATELY ¼ INCH.
10. CONSTRUCTION
   A. USE CHAIRS OR OTHER SUPPORT DEVICES RECOMMENDED BY THE CRSI TO SUPPORT BAR AND TIE REINFORCEMENT BARS AND W.W.F PRIOR TO PLACING CONCRETE. W.W.F SHALL BE CONTINUOUSLY SUPPORTED AT 36" O.C. MAXIMUM. REINFORCING STEEL FOR SLABS ON GRADE SHALL BE ADEQUATELY SUPPORTED ON PRECAST CONCRETE UNITS. LIFTING THE REINFORCING OFF THE GRADE DURING PLACEMENT OF CONCRETE IS NOT PERMITTED.
   B. REINFORCING BARS SHALL NOT BE WELDED.

GENERAL STATEMENT OF SPECIAL INSPECTIONS

1. WHERE APPLICATION IS MADE FOR CONSTRUCTION, THE OWNER SHALL EMPLOY ONE OR MORE APPROVED AGENCIES TO PERFORM INSPECTIONS DURING CONSTRUCTION ON THE TYPES OF WORK LISTED UNDER IBC 2015 SECTION 1704. THESE INSPECTIONS ARE IN ADDITION TO THOSE IDENTIFIED IN SECTION 110.
2. THE SPECIAL INSPECTOR SHALL BE A QUALIFIED PERSON WHO SHALL DEMONSTRATE COMPETENCE, TO THE SATISFACTION OF THE BUILDING OFFICIAL, FOR THE INSPECTION OF THE PARTICULAR TYPE OF CONSTRUCTION OR OPERATION REQUIRING SPECIAL INSPECTION. THE SPECIAL INSPECTOR SHALL PROVIDE WRITTEN DOCUMENTATION TO THE BUILDING OFFICIAL DEMONSTRATING HIS OR HER COMPETENCE AND RELEVANT EXPERIENCE OR TRAINING. EXPERIENCE OR TRAINING SHALL BE CONSIDERED RELEVANT WHEN THE DOCUMENTED EXPERIENCE OR TRAINING IS RELATED IN COMPLEXITY TO THE SAME TYPE OF SPECIAL INSPECTION ACTIVITIES FOR PROJECTS OF SIMILAR COMPLEXITY AND MATERIAL QUALITIES. THE SPECIAL INSPECTION AGENCY SHALL ALSO COMPLY WITH IBC 1703.1.
3. ALL MATERIALS INSPECTIONS & TESTS IDENTIFIED IN THE SPECIAL INSPECTION TABLES AND GENERAL STRUCTURAL NOTES ARE TO COMPLY WITH THE REFERENCES AND STANDARDS LISTED IN THE TABLES IN IBC 2015, CHAPTERS 17, 35 & ELSEWHERE IN THIS CODE.
4. THE TYPE AND EXTENT OF SPECIAL INSPECTIONS ARE AS SPECIFIED IN THE INDIVIDUAL SPECIAL INSPECTION TABLES AND PROJECT SPECIFICATIONS.
5. SPECIAL INSPECTIONS FOR SEISMIC RESISTANCE ARE REQUIRED FOR THE FOLLOWING (SEE PLAN FOR SEISMIC DESIGN CATEGORY):
   A. THE SEISMIC-FORCE-RESISTING SYSTEMS IN STRUCTURES ASSIGNED TO SEISMIC DESIGN CATEGORY C, D, E OR F.
   B. DESIGNATED SEISMIC SYSTEMS IN STRUCTURES ASSIGNED TO SEISMIC DESIGN CATEGORY D, E OR F.
   C. ARCHITECTURAL, STRUCTURAL, MECHANICAL AND ELECTRICAL COMPONENTS IN STRUCTURES ASSIGNED TO SEISMIC DESIGN CATEGORY C, D, E OR F AS STATED IN IBC SECTIONS 1705.12
6. REPORTS OF FINDINGS OR DISCREPANCIES SHALL BE NOTED AND FORWARDED TO THE CONTRACTOR, ARCHITECT, ENGINEERS, AND BUILDING OFFICIAL IN A TIMELY MANNER.
7. STRUCTURAL OBSERVATION VISITS SHALL BE PERFORMED BY A REPRESENTATIVE OF CARTWRIGHT ENGINEERS IN ACCORDANCE WITH THE CONTRACT AS NEEDED TO OBSERVE THE CONSTRUCTION OF CRITICAL BUILDING ELEMENTS (I.E. FOOTINGS, BRACED FRAMES, MOMENT FRAMES, DRAG STRUTS AND THEIR CONNECTIONS, COLLECTORS, AND ROOF AND FLOOR DIAPHRAGMS, ETC.). STRUCTURAL OBSERVATION REPORTS FOR EACH VISIT SHALL BE SENT DIRECTLY TO THE ARCHITECT OR DISTRIBUTED TO THE CONTRACTOR AND BUILDING OFFICIAL. STRUCTURAL OBSERVATION VISITS ARE TO VERIFY THAT WORK IS IN GENERAL CONFORMANCE WITH CONTRACT DOCUMENTS AND SHALL NEITHER BE CONSTRUED AS SPECIAL INSPECTION, INSPECTION BY A BUILDING OFFICIAL, NOR APPROVAL OF COMPLETED CONSTRUCTION.
8. ITEMS THAT ARE LISTED AS DEFERRED STRUCTURAL SUBMITTALS MAY REQUIRE SPECIAL INSPECTIONS IN ADDITION TO THOSE FOUND IN THESE CONSTRUCTION DOCUMENT. SEE GENERAL STRUCTURAL NOTES (SHOP DRAWINGS / DEFERRED SUBMITTALS) FOR ADDITIONAL INFORMATION. PERIODIC INSPECTION U.N.O. IS DEFINED AS COMPLETE INSPECTION OF EACH ELEMENT DURING THE CONSTRUCTION PHASE. CONTRACTOR TO COORDINATE AND COOPERATE WITH SPECIAL INSPECTION REQUIREMENTS.
9. EACH CONTRACTOR RESPONSIBLE FOR THE CONSTRUCTION OF A MAIN WIND- OR SEISMIC-FORCE-RESISTING SYSTEM, DESIGNATED SEISMIC SYSTEM OR A WIND- OR SEISMIC-RESISTING COMPONENT LISTED IN THE STATEMENT OF SPECIAL INSPECTIONS SHALL SUBMIT A WRITTEN STATEMENT OF RESPONSIBILITY TO THE BUILDING OFFICIAL AND THE OWNER PRIOR TO THE COMMENCEMENT OF WORK ON THE SYSTEM OR COMPONENT. THE CONTRACTOR'S STATEMENT OF RESPONSIBILITY SHALL CONTAIN ACKNOWLEDGEMENT OF AWARENESS OF THE SPECIAL REQUIREMENTS CONTAINED IN THE STATEMENT OF *SPECIAL INSPECTIONS*.
10. INSPECTION OF LABELED MATERIALS SHALL BE PER IBC 2015 SECTION 1703.
11. INSPECTION OF ARCHITECTURAL, ELECTRICAL, MECHANICAL EQUIPMENT, SHALL BE PER IBC 2015 SECTION 1705.12.
12. TESTING OF NON-STRUCTURAL ITEMS SHALL BE PER IBC 2015 SECTION 1705.13.2.
13. SPECIAL INSPECTION REQUIREMENTS FOR *THE SEISMIC/WIND-FORCE-RESISTING SYSTEMS* IN ACCORDANCE WITH IBC 2015 SECTION 1705 ARE IN ADDITION TO THE REQUIREMENTS OUTLINED IN THE SPECIAL INSPECTION TABLES IN THESE DOCUMENTS AND IN IBC 2015. ALL OTHER ITEMS REQUIRING SPECIAL INSPECTION ARE IDENTIFIED IN THE SPECIAL INSPECTION SCHEDULE(S). IN CASE OF CONFLICT, THE MOST STRINGENT SPECIAL INSPECTION REQUIREMENTS SHOULD BE PERFORMED. SEISMIC/WIND-FORCE-RESISTING SYSTEMS AND ALL OTHER SYSTEMS, COMPONENTS THAT ARE SUBJECT TO SPECIAL INSPECTIONS ARE IDENTIFIED ON THESE DOCUMENTS WITH A BOXED L. SEE REQUIRED VERIFICATION AND INSPECTION OF WOOD ELEMENTS FOR EXCEPTIONS.

QUALIFICATION OF SPECIAL INSPECTOR

1. THE INSPECTION AGENCY SHALL SUBMIT QUALIFICATIONS AND / OR CERTIFICATIONS TO THE BUILDING OFFICIAL, OWNER, AND/OR OWNERS REPRESENTATIVE TO DETERMINE THAT THE AGENCY MEETS THE APPLICABLE REQUIREMENTS AND IS QUALIFIED TO PERFORM THE TESTS AND INSPECTIONS.
   A. THE AGENCY SHALL BE OBJECTIVE AND COMPETENT.
   B. THE AGENCY SHALL ALSO DISCLOSE POSSIBLE CONFLICTS OF INTEREST SO THAT OBJECTIVITY CAN BE CONFIRMED AND SHALL BE INDEPENDENT OF THE CONTRACTOR.
   C. THE AGENCY SHALL HAVE ADEQUATE EQUIPMENT TO PERFORM REQUIRED TESTS.
   D. THE EQUIPMENT SHALL BE PERIODICALLY CALIBRATED.
   E. THE AGENCY SHALL EMPLOY EXPERIENCED PERSONNEL EDUCATED IN CONDUCTING, SUPERVISING AND EVALUATING TESTS AND INSPECTIONS.
   F. THE SPECIAL INSPECTOR SHALL KEEP RECORDS OF INSPECTIONS.
   G. THE SPECIAL INSPECTOR SHALL FURNISH INSPECTION REPORTS TO THE ARCHITECT, ENGINEER, CONTRACTOR AND BUILDING OFFICIAL. ANY DISCREPANCIES THAT OCCUR SHALL BE BROUGHT TO THE IMMEDIATE ATTENTION OF THE ARCHITECT, ENGINEER, CONTRACTOR AND BUILDING OFFICIAL PRIOR TO THE COMPLETION OF THAT PHASE OF WORK.
   H. WELDING INSPECTOR QUALIFICATION SHALL BE PER IBC 2015 SECTION 1705.2.1

REQUIRED VERIFICATION & INSPECTION OF SOILS

VERIFICATION & INSPECTION	CONT.	PERIODIC	COMMENTS
1. VERIFY MATERIALS BELOW SHALLOW FOUNDATIONS ARE ADEQUATE TO ACHIEVE THE DESIGN BEARING CAPACITY.	—	●	
2. VERIFY EXCAVATIONS ARE EXTENDED TO PROPER DEPTH AND HAVE REACHED PROPER MATERIAL.	—	●	
3. PERFORM CLASSIFICATION AND TESTING OF COMPACTED FILL MATERIALS.	—	●	
4. VERIFY USE OF PROPER MATERIALS, DENSITIES AND LIFT THICKNESS DURING PLACEMENT AND COMPACTION OF COMPACTED FILL.	●	—	
5. PRIOR TO PLACEMENT OF COMPACTED FILL, INSPECT SUBGRADE AND VERIFY THAT SITE HAS BEEN PREPARED PROPERLY.	—	●	

NOTES:
1. SPECIAL INSPECTIONS FOR EXISTING SITE SOIL CONDITIONS, FILL PLACEMENT AND LOAD-BEARING REQUIREMENTS SHALL BE AS REQUIRED BY IBC 1705.6 AND TABLE 1705.6. THE APPROVED GEOTECHNICAL REPORT (IF APPLICABLE), AND THE CONSTRUCTION DOCUMENTS SHALL BE USED TO DETERMINE COMPLIANCE. DURING FILL PLACEMENT, THE SPECIAL INSPECTOR SHALL DETERMINE THAT PROPER MATERIALS AND PROCEDURES ARE USED IN ACCORDANCE WITH THE PROVISIONS OF THE APPROVED GEOTECHNICAL REPORT.
2. WHERE IBC SECTION 1803 DOES NOT REQUIRE REPORTING OF MATERIALS AND PROCEDURES FOR FILL PLACEMENT, OR WHERE A GEOTECHNICAL REPOT IS NOT AVAILABLE, THE SPECIAL INSPECTOR SHALL VERIFY THAT THE IN-PLACE DRY DENSITY OF THE COMPACTED FILL IS NOT LESS THAN 90 PERCENT OF THE MAXIMUM DRY DENSITY AT OPTIMUM MOISTURE CONTENT DETERMINED IN ACCORDANCE WITH ASTM D 1557.

REQUIRED VERIFICATION & INSPECTION OF CONCRETE CONSTRUCTION

VERIFICATION & INSPECTION	CONT.	PERIODIC	COMMENTS
1. INSPECT REINFORCEMENT, INCLUDING PRESTRESSING TENDONS, AND VERIFY PLACEMENT.	—	●	
2. REINFORCING BAR WELDING:			
A. VERIFY WELDABILITY OF REINFORCING BARS OTHER THAN ASTM A706	—	●	
B. INSPECT SINGLE-PASS FILLET WELDS, MAIMUM 5/16", AND	—	●	
C. INSPECT ALL OTHER WELDS	●	—	
3. INSPECT ANCHORS CAST IN CONCRETE	—	●	
4. INSPECT ANCHORS POST-INSTALLED IN HARDENED CONCRETE MEMBERS. b			
A. ADHESIVE ANCHORS INSTALLED IN HORIZONTALLY OR UPWARDLY INCLINED ORIENTATION TO RESIST SUSTAINED TENSION LOADS.	●	—	
B. MECHANICAL ANCHORS AND ADHESIVE ANCHORS NOT DEFINED IN 4.A.	—	●	
5. VERIFYING USE OF REQUIRED DESIGN MIX.	—	●	
6. PRIOR TO CONCRETE PLACEMENT, FABRICATE SPECIMENS FOR STRENTH TESTS, PERFORM SLUMP AND AIR CONTENT TESTS, AND DETERMINE THE TEMPERATURE OF THE CONCRETE.	●	—	
7. INSPECT CONCRETE AND SHOTCRETE PLACEMENT FOR PROPER APPLICATION TECHNIQUES.	●	—	
8. VERIFY MAINTENANCE OF SPECIFIED CURING TEMPERATURE AND TECHNIQUES.	—	●	
9. INSPECT PRESTRESSED CONCRETE FOR:			
A. APPLICATION OF PRESTRESSING FORCES.	●	—	
B. GROUTING OF BONDED PRESTRESSING TENDONS.	●	—	
10. INSPECT ERECTION OF PRECAST CONCRETE MEMBERS.	—	●	
11. VERIFY IN-SITU CONCRETE STRENGTH, PRIOR TO STRESSING OF TENDONS IN POST-TENSIONED CONCRETEND PRIOR TO REMOVAL OF SHORES AND FORMS FROM BEAMS AND STRUCTURAL SLABS.	—	●	
12. INSPECT FORMWORK FOR SHAPE, LOCATION AND DIMENSIONS OF THE CONCRETE MEMBER BEING FORMED.	—	●	

NOTES:
THE SPECIAL INSPECTIONS AND VERIFICATIONS FOR CONCRETE CONSTRUCTION SHALL BE AS REQUIRED BY SECTION 1705.3 AND TABLE 1705.3.
2. WHERE APPLICABLE, SEE ALSO SECTION 1705.12, SPECIAL INSPECTION FOR SEISMIC RESISTANCE.

LEVEL B-QUALITY ASSURANCE FOR MASONRY CONSTRUCTION

VERIFICATION & INSPECTION	CONT.	PERIODIC	COMMENTS
1. VERIFY COMPLIANCE WITH THE APPROVED SUBMITTALS.	—	●	
2. AS MASONRY CONSTRUCTION BEGINS, THE FOLLOWING SHALL BE VERIFIED TO ENSURE COMPLIANCE:			
A. PROPORTIONS OF SITE-PREPARED MORTAR.	—	●	
B. CONSTRUCTION OF MORTAR JOINTS.	—	●	
C. GRADE AND SIZE OF PRESTRESSING TENDONS AND ANCHORAGES.	—	●	N/A
D. LOCATION OF REINFORCEMENT, CONNECTORS, PRESTRESSING TENDONS AND ANCHORAGES.	—	●	N/A
E. PRESTRESSING TECHNIQUE.	—	●	N/A
F. PROPERTIES OF THIN-BED MORTAR FOR AAC MASONRY	●	●	N/A
3. PRIOR TO GROUTING, THE FOLLOWING SHALL BE VERIFIED TO ENSURE COMPLIANCE:			
A. GROUT SPACE IS CLEAN.	—	●	
B. GRADE, TYPE, AND SIZE OF REINFORCEMENT AND ANCHOR BOLTS, AND PRESTRESSING TENDONS AND ANCHORAGES.	—	●	PRESTRESSING N/A
C. PLACEMENT OF REINFORCEMENT AND CONNECTORS, AND PRESTRESSING TENDONS AND ANCHORAGES.	—	●	PRESTRESSING N/A
D. PROPORTIONS OF SITE-PREPARED GROUT AND PRESTRESSING GROUT FOR BONDED TENDONS.	—	●	PRESTRESSING N/A
E. CONSTRUCTION OF MORTAR JOINTS.	—	●	
4. VERIFY DURING CONSTRUCTION:			
A. SIZE AND LOCATION OF STRUCTURAL ELEMENTS.	—	●	
B. TYPE, SIZE AND LOCATION OF ANCHORS, INCLUDING OTHER DETAILS OF ANCHORAGE OF MASONRY TO STRUCTURAL MEMBERS, FRAMES OR OTHER CONSTRUCTION.	—	●	
C. WELDING OF REINFORCING BARS.	●	—	N/A
D. PREPARATION, CONSTRUCTION AND PROTECTION OF MASONRY DURING COLD WEATHER (TEMPERATURE BELOW 40°F) OR HOT WEATHER (TEMPERATURE ABOVE 90°F).	—	●	
E. APPLICATION AND MEASUREMENT OF PRESTRESSING FORCE.	●	—	N/A
F. PLACEMENT OF GROUT AND PRETESTING GROUT FOR BONDED TENDONS IS IN COMPLIANCE.	●	—	PRETESTING N/A
G. PLACEMENT OF AAC MASONRY UNITS AND CONSTRUCTION OF THIN-BED MORTAR JOINTS.	●	—	N/A
5. OBSERVE PREPARATION OF GROUT SPECIMENS, MORTAR SPECIMENS, AND/OR PRISMS.	—	●	

NOTES:
1. MASONRY CONSTRUCTION SHALL BE INSPECTED AND VERIFIED IN ACCORDANCE WITH THE REQUIREMENTS OF SECTIONS 1704.5.1 THROUGH 1704.5.3, DEPENDING ON THE OCCUPANCY CATEGORY OF THE BUILDING OR STRUCTURE (SEE PLAN).
2. SPECIAL INSPECTIONS SHALL NOT BE REQUIRED FOR:
   A. GLASS UNIT MASONRY

CONCRETE REINFORCING BAR LAP SPLICE SCHEDULE

BAR SIZE	f ' c = 3,000psi				f ' c = 4,000psi				f ' c = 5,000psi				f ' c = 6,000psi			
	REGULAR		TOP		REGULAR		TOP		REGULAR		TOP		REGULAR		TOP	
	CLASS		CLASS		CLASS		CLASS		CLASS		CLASS		CLASS		CLASS	
	A	B	A	B	A	B	A	B	A	B	A	B	A	B	A	B
#3	13"	17"	17"	21"	12"	16"	16"	21"	12"	16"	16"	21"	12"	16"	16"	21"
#4	17"	22"	22"	28"	15"	19"	19"	25"	13"	17"	17"	22"	12"	16"	16"	21"
#5	21"	27"	27"	35"	18"	24"	24"	31"	16"	21"	21"	27"	15"	19"	19"	25"
#6	27"	36"	36"	46"	24"	31"	31"	40"	21"	28"	28"	36"	20"	25"	25"	33"
#7	37"	48"	48"	63"	32"	42"	42"	54"	29"	38"	38"	49"	27"	34"	34"	44"
#8	49"	64"	64"	82"	42"	55"	55"	71"	38"	49"	49"	64"	35"	45"	45"	58"
#9	62"	80"	80"	104"	54"	70"	70"	90"	48"	62"	62"	81"	44"	57"	57"	74"
#10	78"	102"	102"	132"	68"	88"	88"	115"	61"	79"	79"	102"	56"	72"	72"	94"
#11	96"	125"	125"	162"	83"	108"	108"	141"	76"	97"	97"	126"	68"	88"	88"	115"

NOTES:
1. THIS SCHEDULE SHALL BE USED FOR ALL BAR SPLICES IN CONCRETE WALLS AND SLABS, U.N.O.
2. CLASS "A" SPLICES MAY BE USED ONLY IN CASES WHERE 50% OR LESS OF THE BARS ARE SPLICED WITHIN THE LAP SPLICE LENGTH, SEE DETAILS BELOW.
3. CLASS "B" SPLICES SHALL BE USED FOR ALL SPLICES UNLESS THE REQUIREMENTS CLASS "A" SPLICES ARE MET.
4. TIES AND STIRRUPS SHALL NOT BE SPLICED.
5. SPLICES FOR BUNDLED BARS:
   A. FOR BUNDLED BARS OF THREE OR LESS, LAP SPLICE LENGTHS SHALL BE MULTIPLIED BY 1.2.
   B. FOR BUNDLED BARS OF FOUR OR MORE, LAP SPLICE LENGTHS SHALL BE MULTIPLIED BY 1.33.
   C. INDIVIDUAL BAR SPLICES WITHIN A BUNDLE SHALL NOT OVERLAP.
   D. ENTIRE BUNDLES SHALL NOT BE LAP SPLICED.
6. FOR ALL LIGHTWEIGHT CONCRETE, LAP LENGTHS SHALL BE MULTIPLIED BY 1.3.
7. FOR ALL EPOXY COATED BARS, LAP LENGTHS SHALL BE MULTIPLIED BY 1.5.
8. TOP BARS ARE DEFINED AS HORIZONTAL BARS WHERE 12", OR MORE, OF FRESH CONCRETE IS CAST BELOW THE REINFORCING BAR.
9. SEE GENERAL STRUCTURAL NOTES FOR ADDITIONAL REQUIREMENTS.

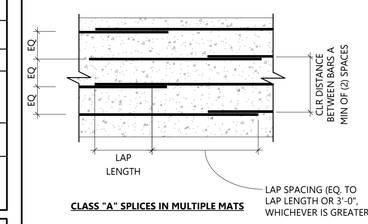

CLASS "A" SPLICES IN MULTIPLE MATS

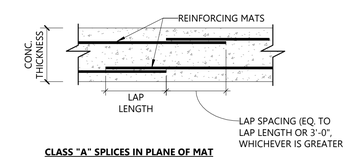

CLASS "A" SPLICES IN PLANE OF MAT

MASTER LEGEND

- 1 / A101 — DETAIL NUMBER / SHEET NUMBER
- 1 / A101 — DETAIL NUMBER / SHEET NUMBER
- XXXX — KEYNOTE NUMBER
- DENOTES EXISTING MASONRY WALL
- DENOTES NEW MASONRY WALL
- DENOTES NEW WOOD WALL
- DENOTES EXISTING WOOD WALL
- DENOTES WOOD SHEAR WALL
- DENOTES HEADER
- JOIST
- GIRDER
- FC2.0 / ELEV. — FTG. TYPE / T.O. FTG. ELEVATION
- FW1 / ELEV. — WALL TYPE / T.O. WALL ELEVATION
- CCX — DENOTES CONCRETE CAISSON
- CPL — DENOTES COLUMN OR PIER
- BPX — DENOTES BASE PLATE
- S — S — INDICATES FOOTING STEP
- XXX — OUT-OF-PLANE / SHEAR TRANSFER TAG -SEE SCHEDULE S601
- EXISTING BEAMS
- EXISTING FRAMING
- EXISTING WOOD NON-BEARING WALL
- EXISTING WOOD BEARING WALL
- EXISTING MASONRY WALL
- MOMENT CONNECTION
- HOLD DOWN

SHEET LIST

Sheet Number	Sheet Name
S001	GENERAL
S101	FOUNDATION PLAN

CARTWRIGHT
2120 NORTH MAIN STREET
LOGAN, UT 84341
T435 753.2850
F435 753.2851
©2019 CARTWRIGHT
http://www.cartwright-aec.com

REGISTERED PROFESSIONAL ENGINEER JOSEPH G. DABEL No. C 74402 Exp. 06/30/2021 CIVIL STATE OF CALIFORNIA
06/18/2019

BU877165 - CORDOVA LANE
SC40175A - NDS PROJECT
10653 COLOMA ROAD
RANCHO CORDOVA, CA 95670

CARTWRIGHT PROJECT #	119042
DATE:	6/18/19
DRAWN BY:	BFL
CHECKED BY:	JD
APPROVED BY:	CAC

REVISIONS

#	DATE	DESCRIPTION

GENERAL

S001

221

CONSTRUCTION SET

SHEET NOTES

1. COORDINATE AND VERIFY THIS DRAWING WITH ALL OTHER DRAWINGS INCLUDING ARCHITECTURAL, MECHANICAL, AND ELECTRICAL DRAWINGS.
2. FOR ALL DIMENSIONS NOT SHOWN, REFER TO THE ARCHITECTURAL DRAWINGS.
3. REFER TO THE GENERAL STRUCTURAL NOTES, DRAWINGS S001 FOR OTHER REQUIREMENTS.

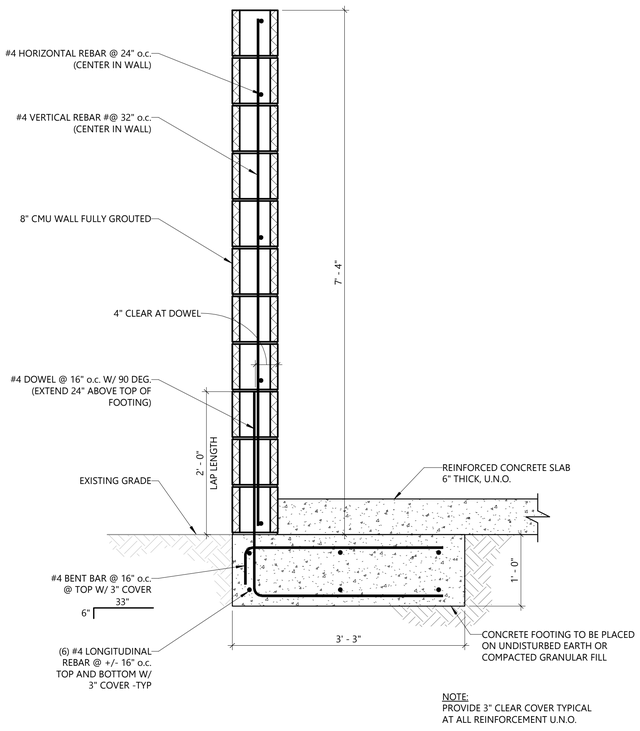

NOTE:
PROVIDE 3" CLEAR COVER TYPICAL AT ALL REINFORCEMENT U.N.O.

A1 CMU SCREEN WALL AT ENCLOSURE
SCALE: 1" = 1'-0"

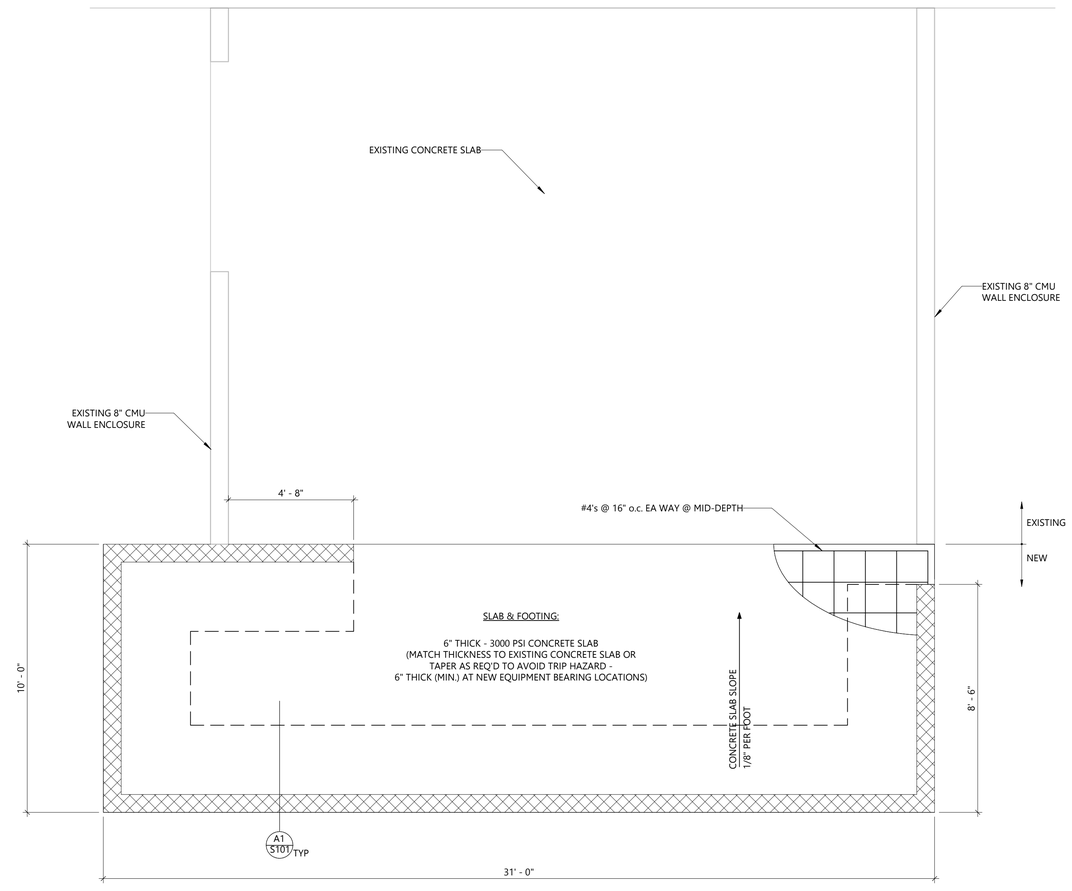

A4 PROPOSED EQUIPMENT ENCLOSURE
SCALE: 3/8" = 1'-0"

CARTWRIGHT
2120 NORTH MAIN STREET
LOGAN, UT 84341
T435 753.2850
F435 753.2851
©2019 CARTWRIGHT
http://www.cartwright-aec.com

REGISTERED PROFESSIONAL ENGINEER
JOSEPH G. DABEL
No. C 74402
Exp. 06/30/2021
CIVIL
STATE OF CALIFORNIA
06/18/2019

BU877165 - CORDOVA LANE
SC40175A - NDS PROJECT

10653 COLOMA ROAD
RANCHO CORDOVA, CA 95670

CARTWRIGHT PROJECT #	119042
DATE:	6/18/19
DRAWN BY:	BFL
CHECKED BY:	JD
APPROVED BY:	CAC

REVISIONS

#	DATE	DESCRIPTION

FOUNDATION PLAN

S101

CONSTRUCTION SET

		Category	Timing/ Implementation	Enforcement/ Monitoring	Verification (date & Signature)
General Conditions					
1.	The approved entitlement is for a Conditional Use Permit Amendment to allow for a 10 foot height extension and antennas for an overall height increase of 15 feet on an existing monopole, installation of additional antennas, additional ground area of 310 square feet for additional ground equipment at 10653 Coloma Road. The project is approved with the conditions herein, for project number 9881. Approval of this permit is subject to the attached project plans.	Project Description	On-Going	Planning	
2.	The Applicant shall hold harmless the City, its Council Members, officers, agents, employees, and representatives from liability for any award, damages, costs and fees incurred by the City and/or awarded to any plaintiff in an action challenging the validity of this permit or any environmental or other documentation related to approval of this permit. Applicant further agrees to provide a defense for the City in any such action.	General	On-Going	Planning	
3.	Any future alteration to the tower, change in use, or intensification of the site must be reviewed by the City to ensure compliance with all local, state, and federal regulations. Minor modifications that are found to be in substantial conformance with the approved plans such as colors, plant materials, or minor lot line adjustments, may be approved administratively. Major modifications shall be approved by the applicable decision making body.	General	On-Going	Planning/ Building /Public Works	
4.	Applicant/Developer shall not carry a negative account balance with the City for the processing of the project. If a negative account balance occurs, it will be the developer's responsibility to pay the balance due, in order to avoid delays in the processing of future permits or recordation of maps. Please email the Finance Department at billings@cityofranchocordova.org for the status of your account with the City.	General	On-Going	Finance	
5.	This permit is valid for a period of three (3) years from the date of City Council approval unless an extension is granted by the	Expiration	On-Going	Planning	

		Category	Timing/ Implementation	Enforcement/ Monitoring	Verification (date & Signature)
	Community Development Director.				
6.	In the event the Applicant requires the relocation or removal of existing SMUD facilities on or adjacent to the subject property, the Applicant shall coordinate with SMUD. The Applicant shall be responsible for the cost of relocation or removal.	SMUD Facilities	On-Going	SMUD	
7.	The antennas and tower equipment shall be an off-white color, consistent with the existing antenna color. In addition the ground equipment screen wall shall be consistent with the existing screen wall.	Design	Prior to Issuance of Building Permit	Planning	
8.	The ground area gate material shall be consistent with the Zoning Ordinance.	Design	Prior to Issuance of Building Permit	Planning	
9.	Cellular Tower plans shall be submitted, reviewed and approved by the Sacramento Metro Fire Department.	Fire Access and Review	Prior to Issuance of Building Permit	Sacramento Metro Fire	
10.	All facilities shall be designed so as to be resistant to and minimize opportunities for unauthorized access, climbing, vandalism, graffiti, and other conditions which would result in hazardous conditions, visual blight, or attractive nuisances.	Safety Design	Prior to Issuance of Building Permit	Planning	
11.	The Tower and related equipment shall not bear any signs or advertising devices other than certification, warning, or other required seals or signs.	Advertising	Prior to Final Inspection	Planning	

ATTACHMENT 4

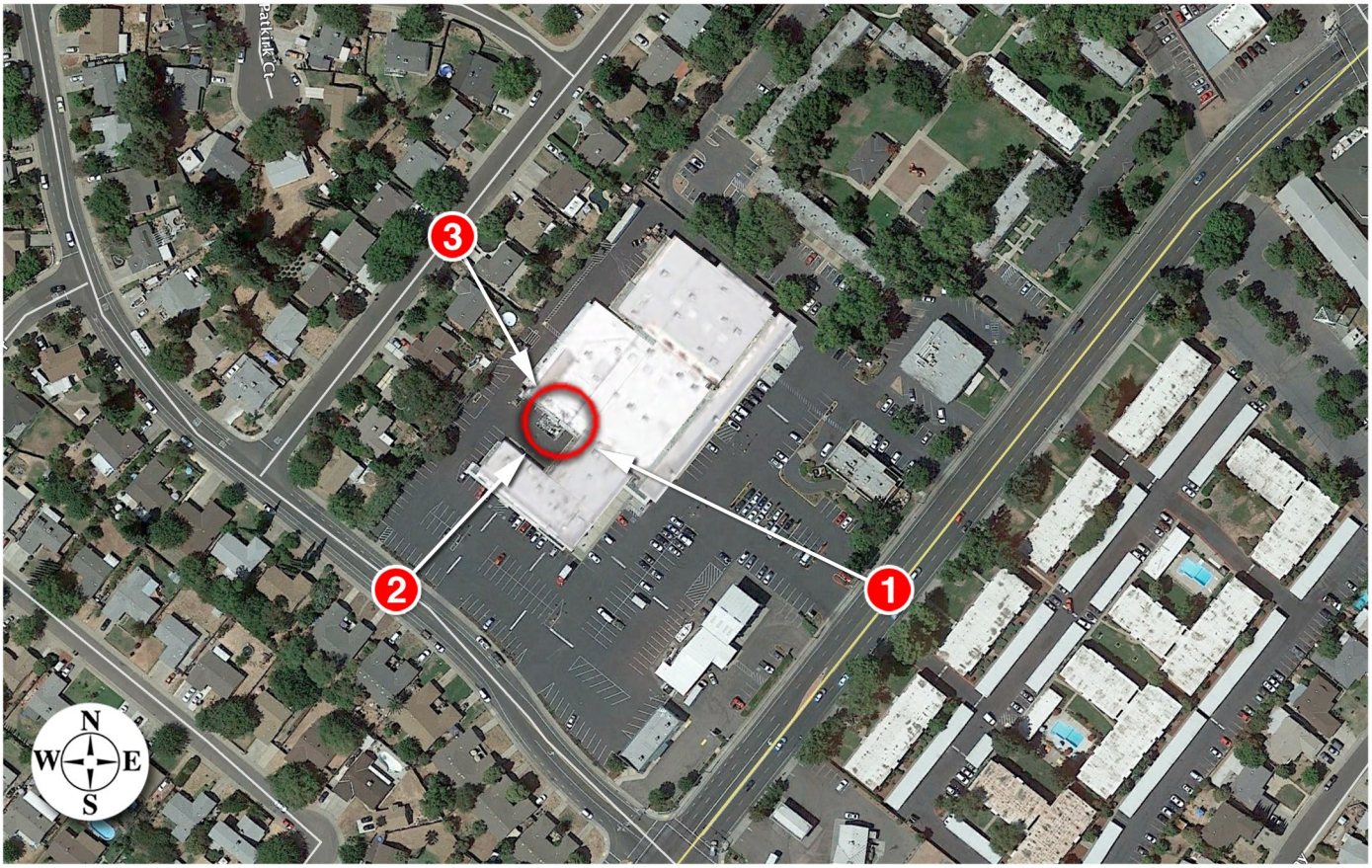

CROWN CASTLE

3/10/19

Cordova Lane **Site # 877165**

10653 Coloma Road
Rancho Cordova, CA

Aerial Map

AGENDA ITEM 15.2

Applied Imagination 510 914-0500

ATTACHMENT 4

CROWN CASTLE

3/10/19

Cordova Lane **Site # 877165**

10653 Coloma Road
Rancho Cordova, CA

Looking Northeast from McGregor Drive

AGENDA ITEM 15.2

Applied Imagination 510 914-0500

ATTACHMENT 4

Existing

Proposed

CROWN CASTLE

3/10/19

Cordova Lane **Site # 877165**

10653 Coloma Road
Rancho Cordova, CA

Looking Northwest from Coloma Road

AGENDA ITEM 15.2

Applied Imagination 510 914-0500

ATTACHMENT 4

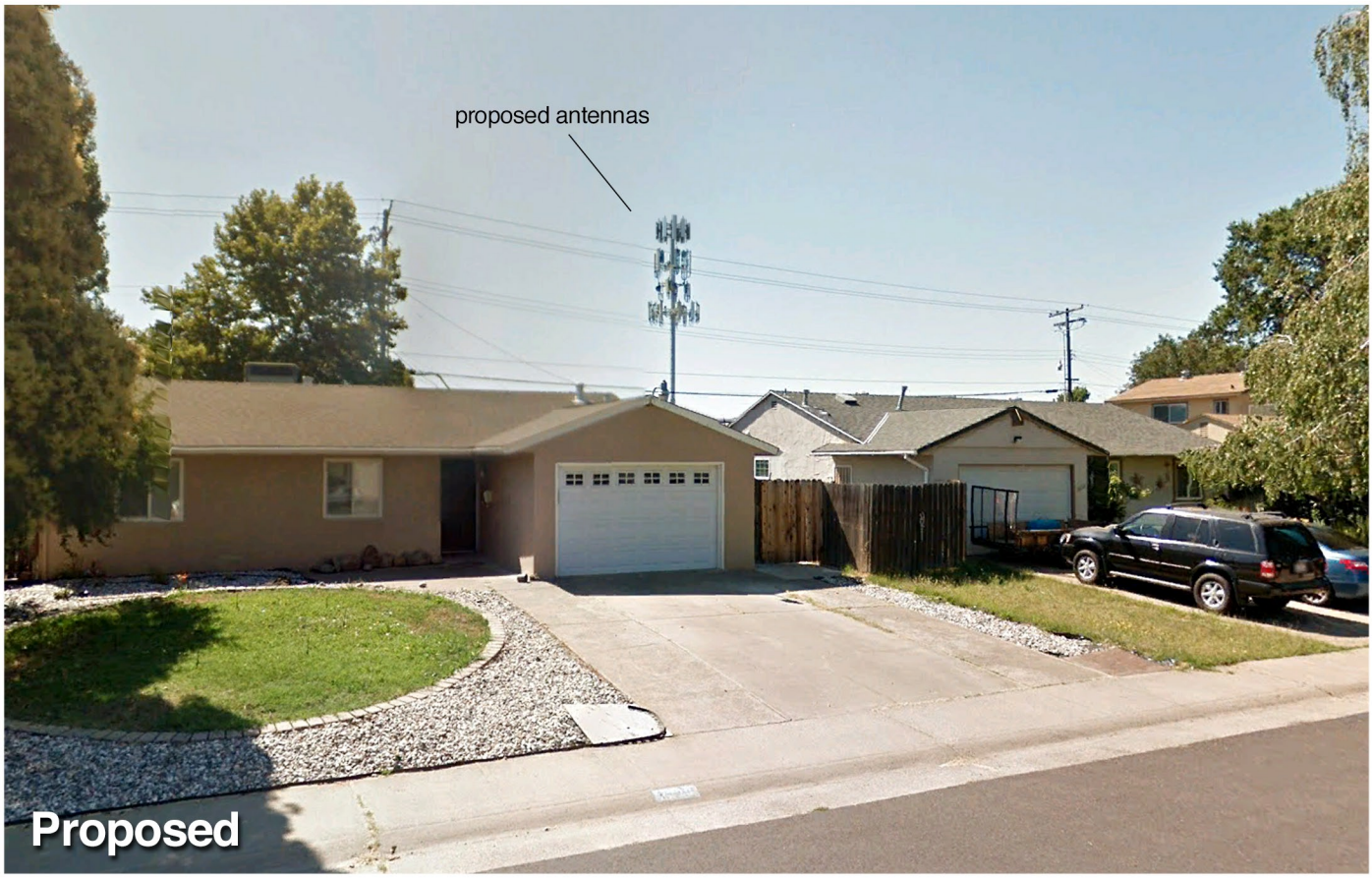

CROWN CASTLE

8/20/19

Cordova Lane **Site # 877165**

10653 Coloma Road
Rancho Cordova, CA

Looking Southeast from Forestlake Drive

AGENDA ITEM 15.2

Applied Imagination 510 914-0500

ATTACHMENT 5

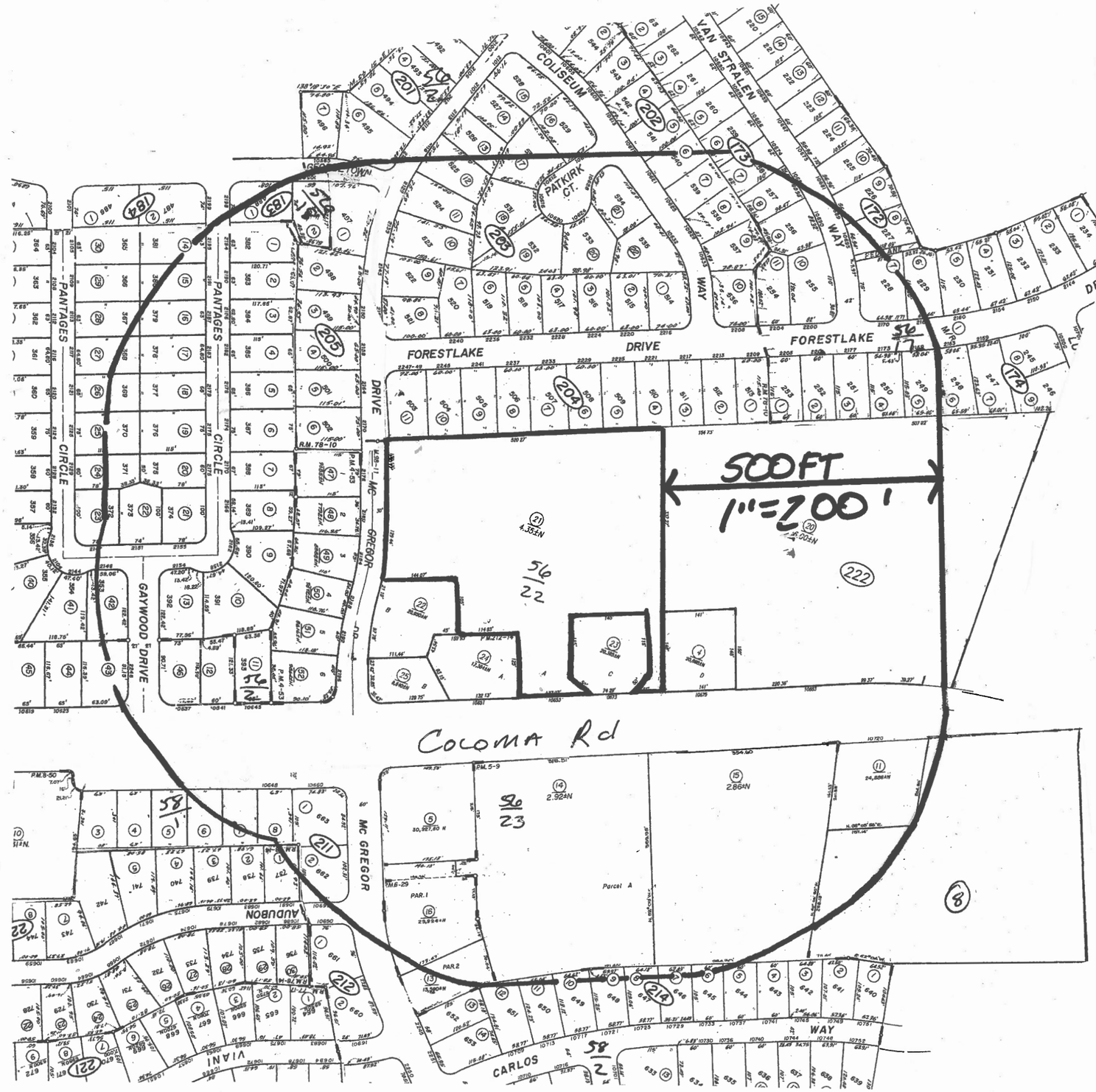

056-0222-021
SONG FAMILY REVOCABLE TRUST
10669 COLOMA RD
RANCHO CORDOVA CA 95670

056-0222-021
OCCUPANT
10647 COLOMA RD
RANCHO CORDOVA CA 95670

056-0222-021
OCCUPANT
10625 COLOMA RD
RANCHO CORDOVA CA 95670

056-0222-021
OCCUPANT
10649 COLOMA RD
RANCHO CORDOVA CA 95670

056-0222-021
OCCUPANT
10653 COLOMA RD
RANCHO CORDOVA CA 95670

056-0222-021
OCCUPANT
10661 COLOMA RD
RANCHO CORDOVA CA 95670

056-0222-021
OCCUPANT
10665 COLOMA RD # 100
RANCHO CORDOVA CA 95670

056-0222-021
OCCUPANT
10665 COLOMA RD # 200
RANCHO CORDOVA CA 95670

056-0222-021
OCCUPANT
10665 COLOMA RD # 300
RANCHO CORDOVA CA 95670

056-0222-021
OCCUPANT
10665 COLOMA RD # 400
RANCHO CORDOVA CA 95670

056-0222-021
OCCUPANT
10665 COLOMA RD # 500
RANCHO CORDOVA CA 95670

056-0222-021
OCCUPANT
10665 COLOMA RD # 600
RANCHO CORDOVA CA 95670

056-0172-006
GALIPEAU LIVING TRUST
2164 FORESTLAKE DR
RANCHO CORDOVA CA 95670

056-0172-007
WILHELM & BETTY D BECKER REVOCABLE TRUST 2006
2170 FORESTLAKE DR
RANCHO CORDOVA CA 95670

056-0172-008
BORIS & GUTIYERA ELLYASON FAMILY TRUST
10695 VAN STRALEN WAY
RANCHO CORDOVA CA 95670

056-0172-009
ELSA & EDOARDO A MORLET
7662 AWAY WAY
CITRUS HEIGHTS CA 95610

056-0172-009
RESIDENT
10689 VAN STRALEN WAY
RANCHO CORDOVA CA 95670

056-0172-010
SUE ANNE LEWIS
10681 VAN STRALEN WAY
RANCHO CORDOVA CA 95670

056-0173-005
SHEWMAKER JOSHUA/ANAHI FRANCO
10658 VAN STRALEN WAY
RANCHO CORDOVA CA 95670

056-0173-006
JAMES E & ESTHER A WILLIAMS FAMILY TRUST
10666 VAN STRALEN WAY
RANCHO CORDOVA CA 95670

056-0173-007
THOMAS CONNELL PUCKETT III REVOCABLE TRUST
10674 VAN STRALEN WAY
RANCHO CORDOVA CA 95670

056-0173-008
BRUCE G NELSON
10682 VAN STRALEN WAY
RANCHO CORDOVA CA 95670

056-0173-009
NUBAR LADOYAN
10690 VAN STRALEN WAY
RANCHO CORDOVA CA 95670

056-0173-010
2018 JOHN FRANKLIN ZUMWALT LIVING TRUST
2200 FORESTLAKE DR
RANCHO CORDOVA CA 95670

056-0173-011
THOMAS J BRICK
2204 FORESTLAKE DR
RANCHO CORDOVA CA 95670

056-0174-001
CRAIG S & SARAH E FAYE
2205 FORESTLAKE DR
RANCHO CORDOVA CA 95670

056-0174-002
VITALIY GULCHUK
2201 FORESTLAKE DR
RANCHO CORDOVA CA 95670

056-0174-003
ERWIN L & JOY C ROUSCH
2177 FORESTLAKE DR
RANCHO CORDOVA CA 95670

056-0174-004
JOHN J CASTORINA 2009 REVOCABLE TRUST
2173 FORESTLAKE DR
RANCHO CORDOVA CA 95670

056-0174-005
ALEX BONDAR
2169 FORESTLAKE DR
RANCHO CORDOVA CA 95670

056-0174-006
KINGSLEY KATHRYN M
2163 FORESTLAKE DR
RANCHO CORDOVA CA 95670

056-0182-001
SUREN DIVANYAN
10559 GEORGETOWN DR
RANCHO CORDOVA CA 95670

056-0183-001
ROBERT & ALYCIA BANKSON
2198 PANTAGES CIR
RANCHO CORDOVA CA 95670

056-0183-002
ARACELI IBARRA
10560 GEORGETOWN DR
RANCHO CORDOVA CA 95670

056-0184-002
PAULA J GALVES
2199 PANTAGES CIR
RANCHO CORDOVA CA 95670

056-0201-006
NANETTE SEVILLA QUEZADA
2427 222ND AVE NE
SAMMAMISH WA 98074

056-0201-006
RESIDENT
2124 MCGREGOR DR
RANCHO CORDOVA CA 95670

056-0201-007
PATRICIA RUCKLE
10565 GEORGETOWN DR
RANCHO CORDOVA CA 95670

056-0202-004
T J & MICHELE WILSON 2017 TRUST
10613 COLISEUM WAY
RANCHO CORDOVA CA 95670

056-0202-005
MICHAEL BORZ
10617 COLISEUM WAY
RANCHO CORDOVA CA 95670

056-0202-006
JAMES J SWEENEY
3253 WILEY POST LOOP
ANCHORAGE AK 99517

056-0202-006
RESIDENT
10621 COLISEUM WAY
RANCHO CORDOVA CA 95670

056-0202-007
ROBIN DRENTLAW
10625 COLISEUM WAY
RANCHO CORDOVA CA 95670

056-0202-008
PAUL A & ERNESTINE C STODDARD
10629 COLISEUM WAY
RANCHO CORDOVA CA 95670

056-0202-009
LESLIE D LEWIS
10633 COLISEUM WAY
RANCHO CORDOVA CA 95670

056-0202-010
JOSEPH & OKSANA SHELEMET
2208 FORESTLAKE DR
RANCHO CORDOVA CA 95670

056-0203-001
LETICIA MERAZ-HENDRICKS
2216 FORESTLAKE DR
RANCHO CORDOVA CA 95670

056-0203-002
MONTANDON EMILY L/RODRIGO TOLAMATL MAYA/ETAL
2220 FORESTLAKE DR
RANCHO CORDOVA CA 95670

056-0203-003
BASIL & GUADALUPE PELLOWSKI FMLY
2224 FORESTLAKE DR
RANCHO CORDOVA CA 95670

056-0203-004
DUANE DALE CHRISTIAN
2228 FORESTLAKE DR
RANCHO CORDOVA CA 95670

056-0203-005
HOPE L MCELROEN
3231 42ND ST
SACRAMENTO CA 95817

056-0203-005
RESIDENT
2232 FORESTLAKE DR
RANCHO CORDOVA CA 95670

056-0203-006
CORY WHITLOCK
2236 FORESTLAKE DR
RANCHO CORDOVA CA 95670

056-0203-007
REGINALD V & GERALDINE L A REEVE 1984
PO BOX 28715
SAN DIEGO CA 92198

056-0203-007
RESIDENT
2240 FORESTLAKE DR
RANCHO CORDOVA CA 95670

056-0203-008
ARTURO & LETICIA RODRIGUEZ
2151 MC GREGOR DR
RANCHO CORDOVA CA 95670

056-0203-009
VANCE O & JOAN M WILSON LIVING TRUST
12341 MIERKEY CT
JACKSON CA 95642

056-0203-009
RESIDENT
2145 MCGREGOR DR
RANCHO CORDOVA CA 95670

056-0203-010
DARYLE E & LEAH LONGSTRETH
2139 MCGREGOR DR
RANCHO CORDOVA CA 95670

056-0203-011
DANIEL W & CINDY L HILMER
2129 MCGREGOR DR
RANCHO CORDOVA CA 95670

056-0203-012
KATY K & MATTHEW A DICKINSON
2119 MCGREGOR DR
RANCHO CORDOVA CA 95670

056-0203-013
VIRGINIA L BANKERD
5507 LYNBROOK CT
CONCORD CA 94521

056-0203-013
RESIDENT
2113 MCGREGOR DR
RANCHO CORDOVA CA 95670

056-0203-014
RAFAEL & MARTHA ESCOBEDO
2107 MCGREGOR DR
RANCHO CORDOVA CA 95670

056-0203-016
CONNIE F & JEFFREY A FARNSWORTH
10608 PATKIRK CT
RANCHO CORDOVA CA 95670

056-0203-017
EVANGELINA CASEY FAMILY TRUST
10612 PATKIRK CT
RANCHO CORDOVA CA 95670

056-0203-018
YELENA & YURIY PETRISHIN
10616 PATKIRK CT
RANCHO CORDOVA CA 95670

056-0203-019
PEARL M HYDE LIVING TRUST
10620 PATKIRK CT
RANCHO CORDOVA CA 95670

056-0203-020
DONALD WOODFORD LIVING TRUST
8434 LA BOUNTY CT
CITRUS HEIGHTS CA 95610

056-0203-020
RESIDENT
10624 PATKIRK CT
RANCHO CORDOVA CA 95670

056-0203-021
LARRY MICHAEL & KARA L LEONARD
10628 COLISEUM WAY
RANCHO CORDOVA CA 95670

056-0203-022
STANLEY RAY WILLIAMS
10632 COLISEUM WAY
RANCHO CORDOVA CA 95670

056-0204-001
TSAUDER FAMILY TRUST
2470 20TH AVE
SAN FRANCISCO CA 94116

056-0204-001
RESIDENT
2209 FORESTLAKE DR
RANCHO CORDOVA CA 95670

056-0204-002
GSELL FAMILY TRUST 2007
2213 FORESTLAKE DR
RANCHO CORDOVA CA 95670

056-0204-003
RENE LOPEZ
2217 FORESTLAKE DR
RANCHO CORDOVA CA 95670

056-0204-004
REMI F QUEYRANE
2221 FORESTLAKE DR
RANCHO CORDOVA CA 95670

056-0204-005
MIKEL CLIFFORD RIDLEY
2225 FORESTLAKE DR
RANCHO CORDOVA CA 95670

056-0204-006
DARRIN GOSS
2229 FORESTLAKE DR
RANCHO CORDOVA CA 95670

056-0204-007
TAMARA BAILEY
2233 FORESTLAKE DR
RANCHO CORDOVA CA 95670

056-0204-008
GEORGE WILLIAM & JEANNIE LYNETTE KEPHART
2237 FORESTLAKE DR
RANCHO CORDOVA CA 95670

056-0204-009
ARNOLD & CYNTHIA MARTINEZ
2241 FORESTLAKE DR
RANCHO CORDOVA CA 95670

056-0204-010
LINDA D BAILEY
2245 FORESTLAKE DR
RANCHO CORDOVA CA 95670

056-0204-011
DAVID SMITH
2249 FORESTLAKE DR
RANCHO CORDOVA CA 95670

056-0205-001
CALABIO FAMILY LIVING TRUST
3495 PONZI CT
RANCHO CORDOVA CA 95670

056-0205-001
RESIDENT
10564 GEORGETOWN DR
RANCHO CORDOVA CA 95670

056-0205-002
2017 1 IH BORROWER LP
1717 MAIN ST #2000
DALLAS TX 75201

056-0205-002
RESIDENT
2146 MCGREGOR DR
RANCHO CORDOVA CA 95670

056-0205-003
YVETTE D & JEFREY BLIGHT
2150 MCGREGOR DR
RANCHO CORDOVA CA 95670

056-0205-004
CHARLES D/BEVERLY K COCHRAN
2158 MCGREGOR DR
RANCHO CORDOVA CA 95670

056-0205-005
MICHAEL B MOELLER
1704 KINGS DR
PASO ROBLES CA 93446

056-0205-005
RESIDENT
2164 MCGREGOR DR
RANCHO CORDOVA CA 95670

056-0205-006
MICHAEL A RHOADES REVOCABLE 2003 TRUST
2170 MC GREGOR DR
RANCHO CORDOVA CA 95670

056-0222-004,022,023
SONG FAMILY REVOCABLE TRUST
10669 COLOMA RD
RANCHO CORDOVA CA 95670

056-0222-020
RC RANCHO CORDOVA ASSOCIATES L P
300 TURNEY ST
SAUSALITO CA 94965

056-0222-020
RESIDENT
10685 COLOMA RD # 1
RANCHO CORDOVA CA 95670

056-0222-020
RESIDENT
10685 COLOMA RD # 2
RANCHO CORDOVA CA 95670

056-0222-020
RESIDENT
10685 COLOMA RD # 3
RANCHO CORDOVA CA 95670

056-0222-020
RESIDENT
10685 COLOMA RD # 4
RANCHO CORDOVA CA 95670

056-0222-020
RESIDENT
10685 COLOMA RD # 5
RANCHO CORDOVA CA 95670

056-0222-020
RESIDENT
10685 COLOMA RD # 6
RANCHO CORDOVA CA 95670

056-0222-020
RESIDENT
10685 COLOMA RD # 7
RANCHO CORDOVA CA 95670

056-0222-020
RESIDENT
10685 COLOMA RD # 8
RANCHO CORDOVA CA 95670

056-0222-020
RESIDENT
10685 COLOMA RD # 9
RANCHO CORDOVA CA 95670

056-0222-020
RESIDENT
10685 COLOMA RD # 10
RANCHO CORDOVA CA 95670

056-0222-020
RESIDENT
10685 COLOMA RD # 11
RANCHO CORDOVA CA 95670

056-0222-020
RESIDENT
10685 COLOMA RD # 12
RANCHO CORDOVA CA 95670

056-0222-020
RESIDENT
10685 COLOMA RD # 13
RANCHO CORDOVA CA 95670

056-0222-020
RESIDENT
10685 COLOMA RD # 14
RANCHO CORDOVA CA 95670

056-0222-020
RESIDENT
10685 COLOMA RD # 15
RANCHO CORDOVA CA 95670

056-0222-020
RESIDENT
10685 COLOMA RD # 16
RANCHO CORDOVA CA 95670

056-0222-020
RESIDENT
10685 COLOMA RD # 17
RANCHO CORDOVA CA 95670

056-0222-020
RESIDENT
10685 COLOMA RD # 18
RANCHO CORDOVA CA 95670

056-0222-020
RESIDENT
10685 COLOMA RD # 19
RANCHO CORDOVA CA 95670

056-0222-020
RESIDENT
10685 COLOMA RD # 20
RANCHO CORDOVA CA 95670

056-0222-020
RESIDENT
10685 COLOMA RD # 21
RANCHO CORDOVA CA 95670

056-0222-020
RESIDENT
10685 COLOMA RD # 22
RANCHO CORDOVA CA 95670

056-0222-020
RESIDENT
10685 COLOMA RD # 23
RANCHO CORDOVA CA 95670

056-0222-020
RESIDENT
10685 COLOMA RD # 24
RANCHO CORDOVA CA 95670

056-0222-020
RESIDENT
10685 COLOMA RD # 25
RANCHO CORDOVA CA 95670

056-0222-020
RESIDENT
10685 COLOMA RD # 26
RANCHO CORDOVA CA 95670

056-0222-020
RESIDENT
10685 COLOMA RD # 27
RANCHO CORDOVA CA 95670

056-0222-020
RESIDENT
10685 COLOMA RD # 28
RANCHO CORDOVA CA 95670

056-0222-020
RESIDENT
10685 COLOMA RD # 29
RANCHO CORDOVA CA 95670

056-0222-020
RESIDENT
10685 COLOMA RD # 30
RANCHO CORDOVA CA 95670

056-0222-020
RESIDENT
10685 COLOMA RD # 31
RANCHO CORDOVA CA 95670

056-0222-020
RESIDENT
10685 COLOMA RD # 32
RANCHO CORDOVA CA 95670

056-0222-020
RESIDENT
10685 COLOMA RD # 33
RANCHO CORDOVA CA 95670

056-0222-020
RESIDENT
10685 COLOMA RD # 34
RANCHO CORDOVA CA 95670

056-0222-020
RESIDENT
10685 COLOMA RD # 35
RANCHO CORDOVA CA 95670

056-0222-020
RESIDENT
10685 COLOMA RD # 36
RANCHO CORDOVA CA 95670

056-0222-020
RESIDENT
10685 COLOMA RD # 37
RANCHO CORDOVA CA 95670

056-0222-020
RESIDENT
10685 COLOMA RD # 38
RANCHO CORDOVA CA 95670

056-0222-020
RESIDENT
10685 COLOMA RD # 39
RANCHO CORDOVA CA 95670

056-0222-020
RESIDENT
10685 COLOMA RD # 40
RANCHO CORDOVA CA 95670

056-0222-020
RESIDENT
10685 COLOMA RD # 41
RANCHO CORDOVA CA 95670

056-0222-020
RESIDENT
10685 COLOMA RD # 42
RANCHO CORDOVA CA 95670

056-0222-020
RESIDENT
10685 COLOMA RD # 43
RANCHO CORDOVA CA 95670

056-0222-020
RESIDENT
10685 COLOMA RD # 44
RANCHO CORDOVA CA 95670

056-0222-020
RESIDENT
10685 COLOMA RD # 45
RANCHO CORDOVA CA 95670

056-0222-020
RESIDENT
10685 COLOMA RD # 46
RANCHO CORDOVA CA 95670

056-0222-020
RESIDENT
10685 COLOMA RD # 47
RANCHO CORDOVA CA 95670

056-0222-020
RESIDENT
10685 COLOMA RD # 48
RANCHO CORDOVA CA 95670

056-0222-020
RESIDENT
10685 COLOMA RD # 49
RANCHO CORDOVA CA 95670

056-0222-020
RESIDENT
10685 COLOMA RD # 50
RANCHO CORDOVA CA 95670

056-0222-020
RESIDENT
10685 COLOMA RD # 51
RANCHO CORDOVA CA 95670

056-0222-020
RESIDENT
10685 COLOMA RD # 52
RANCHO CORDOVA CA 95670

056-0222-020
RESIDENT
10685 COLOMA RD # 53
RANCHO CORDOVA CA 95670

056-0222-020
RESIDENT
10685 COLOMA RD # 54
RANCHO CORDOVA CA 95670

056-0222-020
RESIDENT
10685 COLOMA RD # 55
RANCHO CORDOVA CA 95670

056-0222-020
RESIDENT
10685 COLOMA RD # 56
RANCHO CORDOVA CA 95670

056-0222-020
RESIDENT
10685 COLOMA RD # 57
RANCHO CORDOVA CA 95670

056-0222-020
RESIDENT
10685 COLOMA RD # 58
RANCHO CORDOVA CA 95670

056-0222-020
RESIDENT
10685 COLOMA RD # 59
RANCHO CORDOVA CA 95670

056-0222-020
RESIDENT
10685 COLOMA RD # 60
RANCHO CORDOVA CA 95670

056-0222-020
RESIDENT
10685 COLOMA RD # 61
RANCHO CORDOVA CA 95670

056-0222-020
RESIDENT
10685 COLOMA RD # 62
RANCHO CORDOVA CA 95670

056-0222-020
RESIDENT
10685 COLOMA RD # 63
RANCHO CORDOVA CA 95670

056-0222-020
RESIDENT
10685 COLOMA RD # 64
RANCHO CORDOVA CA 95670

056-0222-020
RESIDENT
10685 COLOMA RD # 65
RANCHO CORDOVA CA 95670

056-0222-020
RESIDENT
10685 COLOMA RD # 66
RANCHO CORDOVA CA 95670

056-0222-020
RESIDENT
10685 COLOMA RD # 67
RANCHO CORDOVA CA 95670

056-0222-020
RESIDENT
10685 COLOMA RD # 68
RANCHO CORDOVA CA 95670

056-0222-020
RESIDENT
10685 COLOMA RD # 69
RANCHO CORDOVA CA 95670

056-0222-020
RESIDENT
10685 COLOMA RD # 70
RANCHO CORDOVA CA 95670

056-0222-020
RESIDENT
10685 COLOMA RD # 71
RANCHO CORDOVA CA 95670

056-0222-020
RESIDENT
10685 COLOMA RD # 72
RANCHO CORDOVA CA 95670

056-0222-020
RESIDENT
10685 COLOMA RD # 73
RANCHO CORDOVA CA 95670

056-0222-020
RESIDENT
10685 COLOMA RD # 74
RANCHO CORDOVA CA 95670

056-0222-020
RESIDENT
10685 COLOMA RD # 75
RANCHO CORDOVA CA 95670

056-0222-020
RESIDENT
10685 COLOMA RD # 76
RANCHO CORDOVA CA 95670

056-0222-020
RESIDENT
10685 COLOMA RD # 77
RANCHO CORDOVA CA 95670

056-0222-020
RESIDENT
10685 COLOMA RD # 78
RANCHO CORDOVA CA 95670

056-0222-020
RESIDENT
10685 COLOMA RD # 79
RANCHO CORDOVA CA 95670

056-0222-020
RESIDENT
10685 COLOMA RD # 80
RANCHO CORDOVA CA 95670

056-0222-020
RESIDENT
10685 COLOMA RD # 81
RANCHO CORDOVA CA 95670

056-0222-020
RESIDENT
10685 COLOMA RD # 82
RANCHO CORDOVA CA 95670

056-0222-020
RESIDENT
10685 COLOMA RD # 83
RANCHO CORDOVA CA 95670

056-0222-020
RESIDENT
10685 COLOMA RD # 84
RANCHO CORDOVA CA 95670

056-0222-020
RESIDENT
10685 COLOMA RD # 85
RANCHO CORDOVA CA 95670

056-0222-020
RESIDENT
10685 COLOMA RD # 86
RANCHO CORDOVA CA 95670

056-0222-020
RESIDENT
10685 COLOMA RD # 87
RANCHO CORDOVA CA 95670

056-0222-020
RESIDENT
10685 COLOMA RD # 88
RANCHO CORDOVA CA 95670

056-0222-020
RESIDENT
10685 COLOMA RD # 89
RANCHO CORDOVA CA 95670

056-0222-020
RESIDENT
10685 COLOMA RD # 90
RANCHO CORDOVA CA 95670

056-0222-020
RESIDENT
10685 COLOMA RD # 91
RANCHO CORDOVA CA 95670

056-0222-020
RESIDENT
10685 COLOMA RD # 92
RANCHO CORDOVA CA 95670

056-0222-020
RESIDENT
10685 COLOMA RD # 93
RANCHO CORDOVA CA 95670

056-0222-020
RESIDENT
10685 COLOMA RD # 94
RANCHO CORDOVA CA 95670

056-0222-020
RESIDENT
10685 COLOMA RD # 95
RANCHO CORDOVA CA 95670

056-0222-024,025
ALCIDES A GONZALEZ TRUST
6636 TONZI RD
IONE CA 95640

056-0222-024
OCCUPANT
10655 COLOMA RD
RANCHO CORDOVA CA 95670

056-0222-025
OCCUPANT
10655 COLOMA RD
RANCHO CORDOVA CA 95670

056-0250-001
KENDRA A MACKEY
2194 PANTAGES CIR
RANCHO CORDOVA CA 95670

056-0250-002
DOUGLAS & CONNIE VAN TASSEL LIVING TRUST
2190 PANTAGES CIR
RANCHO CORDOVA CA 95670

056-0250-003
CHRIS REALI
2186 PANTAGES CIR
RANCHO CORDOVA CA 95670

056-0250-004
LUCSKY FAMILY TRUST
2182 PANTAGES CIR
RANCHO CORDOVA CA 95670

056-0250-005
KELLI M BROOKS
2178 PANTAGES CIR
RANCHO CORDOVA CA 95670

056-0250-006
CARLOS M & DIANA Y VALENTIN S SANTANA
2174 PANTAGES CIR
RANCHO CORDOVA CA 95670

056-0250-007
CAROL SAULSBERRY
6518 GRANITE TRL
POLLOCK PINES CA 95726

056-0250-007
RESIDENT
2170 PANTAGES CIR
RANCHO CORDOVA CA 95670

056-0250-008
2018 3 IH BORROWER LP
1717 MAIN ST #2000
DALLAS TX 75201

056-0250-008
RESIDENT
2166 PANTAGES CIR
RANCHO CORDOVA CA 95670

056-0250-009
PERZHU NATALYA/ANDREY PAVLOVICH
2162 PANTAGES CIR
RANCHO CORDOVA CA 95670

056-0250-010
IRWIN THOMAS L III
2158 PANTAGES CIR
RANCHO CORDOVA CA 95670

056-0250-011
ANGELA CORTES
10645 COLOMA RD
RANCHO CORDOVA CA 95670

056-0250-012,028
RICHARD A GIVENS SEP PROP REVOCABLE TRUST
10641 COLOMA RD
RANCHO CORDOVA CA 95670

056-0250-028
RESIDENT
2113 PANTAGES CIR
RANCHO CORDOVA CA 95670

056-0250-013
NANCY HERNANDEZ OJEDA MATA
2154 PANTAGES CIR
RANCHO CORDOVA CA 95670

056-0250-014
MARK A & JENNIFER L ARNEZ
2195 PANTAGES CIR
RANCHO CORDOVA CA 95670

056-0250-015
LISA CHANEY
2191 PANTAGES CIR
RANCHO CORDOVA CA 95670

056-0250-016
MICHELLE M PETERSON
2187 PANTAGES CIR
RANCHO CORDOVA CA 95670

056-0250-017
ISAIAS VALDEZ
2183 PANTAGES CIR
RANCHO CORDOVA CA 95670

056-0250-018
ALFONSO MAYA
2179 PANTAGES CIR
RANCHO CORDOVA CA 95670

056-0250-019
JASON MANN
2175 PANTAGES CIR
RANCHO CORDOVA CA 95670

056-0250-020
MICHELLE LYNNE KOENIG
2171 PANTAGES CIR
RANCHO CORDOVA CA 95670

056-0250-021
INGRID ROSTEN
2155 PANTAGES CIR
RANCHO CORDOVA CA 95670

056-0250-022
ROBERT CRAWFORD
2151 PANTAGES CIR
RANCHO CORDOVA CA 95670

056-0250-023
ALEKSANDR KUBAY
2512 ANGIE WAY
RANCHO CORDOVA CA 95670

056-0250-023
RESIDENT
2147 PANTAGES CIR
RANCHO CORDOVA CA 95670

056-0250-024
RAY B & SARA C ABDO
2129 PANTAGES CIR
RANCHO CORDOVA CA 95670

056-0250-025
LAVERNE C BRITTON LIVING TRUST
2125 PANTAGES CIR
RANCHO CORDOVA CA 95670

056-0250-026
DANIEL KRPATA
2121 PANTAGES CIR
RANCHO CORDOVA CA 95670

056-0250-027
LYUDMILA MALIGINA
2117 PANTAGES CIR
RANCHO CORDOVA CA 95670

056-0250-042
SIMI K KREFT REVOCABLE LIVING TRUST
2148 PANTAGES CIR
RANCHO CORDOVA CA 95670

056-0250-043
TATYANA ROTARU
2248 GAYWOOD DR
RANCHO CORDOVA CA 95670

056-0250-046
HOLLY ANN FERREIRAE
10637 COLOMA RD
RANCHO CORDOVA CA 95670

056-0250-047
MELBA WOOD FAMILY TRUST
9575 CANOPY TREE ST
ROSEVILLE CA 95747

056-0250-047
RESIDENT
2176 MCGREGOR DR
RANCHO CORDOVA CA 95670

056-0250-048
SHERYL R MCFALL
2001 MARYVALE WAY
RANCHO CORDOVA CA 95670

056-0250-048
RESIDENT
2180 MCGREGOR DR
RANCHO CORDOVA CA 95670

056-0250-049
KAMELIYA LOZANOVA
2186 MCGREGOR DR
RANCHO CORDOVA CA 95670

056-0250-049
RESIDENT
2184 MCGREGOR DR
RANCHO CORDOVA CA 95670

056-0250-050
RICHARD M & PATRICIA A FAIRALL
5130 DREDGER WAY
ORANGEVALE CA 95662

056-0250-050
RESIDENT
2188 MCGREGOR DR
RANCHO CORDOVA CA 95670

056-0250-051,052
SPENCER FAMILY PROPERTIES LLC
590 MENLO DR #7
ROCKLIN CA 95765

056-0250-051
RESIDENT
2192 MCGREGOR DR
RANCHO CORDOVA CA 95670

056-0250-052
RESIDENT
2196 MCGREGOR DR
RANCHO CORDOVA CA 95670

056-0260-001
PLISE 2003 REVOCABLE TRUST
229 JAMES CT
SOUTH SAN FRAN CA 94080

056-0260-001
OCCUPANT
10721 COLOMA RD
RANCHO CORDOVA CA 95670

058-0018-005
LORI A WOOD
10636 COLOMA RD
RANCHO CORDOVA CA 95670

058-0018-006
RAUL & VICTORIA CIGARROA
10640 COLOMA RD
RANCHO CORDOVA CA 95670

058-0018-007
PERCY L & OFELIA V BARTON
10644 COLOMA RD
RANCHO CORDOVA CA 95670

058-0051-008,0230-011
FIRST BAPTIST CHURCH OF RANCHO CORDOVA CALIFORNIA
10720 COLOMA RD
RANCHO CORDOVA CA 95670

058-0018-008
WILLIAM & JENNIFER R YINGLING
10648 COLOMA RD
RANCHO CORDOVA CA 95670

058-0211-001
COLLEEN DZWONEK
602 S GRANT ST
SAN MATEO CA 94402

058-0211-001
RESIDENT
10660 COLOMA RD
RANCHO CORDOVA CA 95670

058-0211-002
KUYKENDALL FAMILY TRUST
10691 AUDUBON WAY
RANCHO CORDOVA CA 95670

058-0212-001
KYLE & HAYLEY MANDRUP
10690 AUDUBON WAY
RANCHO CORDOVA CA 95670

058-0214-003
DACIA OSTRANDER
10745 CARLOS WAY
RANCHO CORDOVA CA 95670

058-0214-004
LUIS A A & VICTOR E HERNANDEZ
10741 CARLOS WAY
RANCHO CORDOVA CA 95670

058-0214-005
JOSEPH N & ANN M SACULLA FAMILY TRUST
10737 CARLOS WAY
RANCHO CORDOVA CA 95670

058-0214-006
MARIO & MARIA GUENDULAIN
10733 CARLOS WAY
RANCHO CORDOVA CA 95670

058-0214-007
WILLIAM P DORA
10729 CARLOS WAY
RANCHO CORDOVA CA 95670

058-0214-008
RAVI KANT
10725 CARLOS WAY
RANCHO CORDOVA CA 95670

058-0214-009
GARY W & TERESA A MARTIN
300 TEMPLETON CT
GRANITE BAY CA 95746

058-0214-009
RESIDENT
10721 CARLOS WAY
RANCHO CORDOVA CA 95670

058-0214-010
JESUS M ESQUILIN
10717 CARLOS WAY
RANCHO CORDOVA CA 95670

058-0214-011
WILLIAM J & ELIZABETH P BARNETT FAMILY TRUST
10713 CARLOS WAY
RANCHO CORDOVA CA 95670

058-0214-012
GEETA SESHADRI
39199 GUARDINO DR #277
FREMONT CA 94538

058-0214-012
RESIDENT
10709 CARLOS WAY
RANCHO CORDOVA CA 95670

058-0214-013
KEITH DAVENPORT
2245 MCGREGOR DR
RANCHO CORDOVA CA 95670

058-0224-001
YOUNG FAMILY REVOCABLE TRUST
9307 DEFIANCE CIR
SACRAMENTO CA 95827

058-0224-001
RESIDENT
10687 AUDUBON WAY
RANCHO CORDOVA CA 95670

058-0224-002
BACH FAMILY TRUST
2737 TIERRA GRANDE CIR
SACRAMENTO CA 95827

058-0224-002
RESIDENT
10683 AUDUBON WAY
RANCHO CORDOVA CA 95670

058-0230-005
LOIS & MOHAMED H DAMRA
10670 COLOMA RD
RANCHO CORDOVA CA 95670

058-0230-013
SUSAN DIEHL REVOCABLE TRUST
580 PHELPS RD
SAN CARLOS CA 94070

058-0230-013
OCCUPANT
2239 MCGREGOR DR
RANCHO CORDOVA CA 95670

058-0230-014,015
COOL TIME LLC
8251 ALPINE AVE
SACRAMENTO CA 95826

058-0230-014
OCCUPANT
10680 COLOMA RD # OFFICE
RANCHO CORDOVA CA 95670

058-0230-014
RESIDENT
10680 COLOMA RD # 101
RANCHO CORDOVA CA 95670

058-0230-014
RESIDENT
10680 COLOMA RD # 102
RANCHO CORDOVA CA 95670

058-0230-014
RESIDENT
10680 COLOMA RD # 103
RANCHO CORDOVA CA 95670

058-0230-014
RESIDENT
10680 COLOMA RD # 104
RANCHO CORDOVA CA 95670

058-0230-014
RESIDENT
10680 COLOMA RD # 105
RANCHO CORDOVA CA 95670

058-0230-014
RESIDENT
10680 COLOMA RD # 106
RANCHO CORDOVA CA 95670

058-0230-014
RESIDENT
10680 COLOMA RD # 107
RANCHO CORDOVA CA 95670

058-0230-014
RESIDENT
10680 COLOMA RD # 108
RANCHO CORDOVA CA 95670

058-0230-014
RESIDENT
10680 COLOMA RD # 109
RANCHO CORDOVA CA 95670

058-0230-014
RESIDENT
10680 COLOMA RD # 110
RANCHO CORDOVA CA 95670

058-0230-014
RESIDENT
10680 COLOMA RD # 111
RANCHO CORDOVA CA 95670

058-0230-014
RESIDENT
10680 COLOMA RD # 112
RANCHO CORDOVA CA 95670

058-0230-014
RESIDENT
10680 COLOMA RD # 113
RANCHO CORDOVA CA 95670

058-0230-014
RESIDENT
10680 COLOMA RD # 114
RANCHO CORDOVA CA 95670

058-0230-014
RESIDENT
10680 COLOMA RD # 115
RANCHO CORDOVA CA 95670

058-0230-014
RESIDENT
10680 COLOMA RD # 116
RANCHO CORDOVA CA 95670

058-0230-014
RESIDENT
10680 COLOMA RD # 117
RANCHO CORDOVA CA 95670

058-0230-014
RESIDENT
10680 COLOMA RD # 118
RANCHO CORDOVA CA 95670

058-0230-014
RESIDENT
10680 COLOMA RD # 119
RANCHO CORDOVA CA 95670

058-0230-014
RESIDENT
10680 COLOMA RD # 120
RANCHO CORDOVA CA 95670

058-0230-014
RESIDENT
10680 COLOMA RD # 121
RANCHO CORDOVA CA 95670

058-0230-014
RESIDENT
10680 COLOMA RD # 122
RANCHO CORDOVA CA 95670

058-0230-014
RESIDENT
10680 COLOMA RD # 123
RANCHO CORDOVA CA 95670

058-0230-014
RESIDENT
10680 COLOMA RD # 124
RANCHO CORDOVA CA 95670

058-0230-014
RESIDENT
10680 COLOMA RD # 125
RANCHO CORDOVA CA 95670

058-0230-014
RESIDENT
10680 COLOMA RD # 126
RANCHO CORDOVA CA 95670

058-0230-014
RESIDENT
10680 COLOMA RD # 127
RANCHO CORDOVA CA 95670

058-0230-014
RESIDENT
10680 COLOMA RD # 128
RANCHO CORDOVA CA 95670

058-0230-014
RESIDENT
10680 COLOMA RD # 129
RANCHO CORDOVA CA 95670

058-0230-014
RESIDENT
10680 COLOMA RD # 130
RANCHO CORDOVA CA 95670

058-0230-014
RESIDENT
10680 COLOMA RD # 131
RANCHO CORDOVA CA 95670

058-0230-014
RESIDENT
10680 COLOMA RD # 132
RANCHO CORDOVA CA 95670

058-0230-014
RESIDENT
10680 COLOMA RD # 133
RANCHO CORDOVA CA 95670

058-0230-014
RESIDENT
10680 COLOMA RD # 134
RANCHO CORDOVA CA 95670

058-0230-014
RESIDENT
10680 COLOMA RD # 135
RANCHO CORDOVA CA 95670

058-0230-014
RESIDENT
10680 COLOMA RD # 136
RANCHO CORDOVA CA 95670

058-0230-014
RESIDENT
10680 COLOMA RD # 137
RANCHO CORDOVA CA 95670

058-0230-014
RESIDENT
10680 COLOMA RD # 138
RANCHO CORDOVA CA 95670

058-0230-014
RESIDENT
10680 COLOMA RD # 139
RANCHO CORDOVA CA 95670

058-0230-014
RESIDENT
10680 COLOMA RD # 140
RANCHO CORDOVA CA 95670

058-0230-014
RESIDENT
10680 COLOMA RD # 141
RANCHO CORDOVA CA 95670

058-0230-014
RESIDENT
10680 COLOMA RD # 142
RANCHO CORDOVA CA 95670

058-0230-014
RESIDENT
10680 COLOMA RD # 143
RANCHO CORDOVA CA 95670

058-0230-014
RESIDENT
10680 COLOMA RD # 144
RANCHO CORDOVA CA 95670

058-0230-014
RESIDENT
10680 COLOMA RD # 145
RANCHO CORDOVA CA 95670

058-0230-014
RESIDENT
10680 COLOMA RD # 146
RANCHO CORDOVA CA 95670

058-0230-014
RESIDENT
10680 COLOMA RD # 147
RANCHO CORDOVA CA 95670

058-0230-014
RESIDENT
10680 COLOMA RD # 148
RANCHO CORDOVA CA 95670

058-0230-014
RESIDENT
10680 COLOMA RD # 149
RANCHO CORDOVA CA 95670

058-0230-014
RESIDENT
10680 COLOMA RD # 150
RANCHO CORDOVA CA 95670

058-0230-014
RESIDENT
10680 COLOMA RD # 151
RANCHO CORDOVA CA 95670

058-0230-014
RESIDENT
10680 COLOMA RD # 152
RANCHO CORDOVA CA 95670

058-0230-014
RESIDENT
10680 COLOMA RD # 153
RANCHO CORDOVA CA 95670

058-0230-014
RESIDENT
10680 COLOMA RD # 154
RANCHO CORDOVA CA 95670

058-0230-014
RESIDENT
10680 COLOMA RD # 155
RANCHO CORDOVA CA 95670

058-0230-014
RESIDENT
10680 COLOMA RD # 156
RANCHO CORDOVA CA 95670

058-0230-014
RESIDENT
10680 COLOMA RD # 157
RANCHO CORDOVA CA 95670

058-0230-014
RESIDENT
10680 COLOMA RD # 158
RANCHO CORDOVA CA 95670

058-0230-014
RESIDENT
10680 COLOMA RD # 159
RANCHO CORDOVA CA 95670

058-0230-014
RESIDENT
10680 COLOMA RD # 160
RANCHO CORDOVA CA 95670

058-0230-014
RESIDENT
10680 COLOMA RD # 161
RANCHO CORDOVA CA 95670

058-0230-014
RESIDENT
10680 COLOMA RD # 162
RANCHO CORDOVA CA 95670

058-0230-014
RESIDENT
10680 COLOMA RD # 163
RANCHO CORDOVA CA 95670

058-0230-014
RESIDENT
10680 COLOMA RD # 164
RANCHO CORDOVA CA 95670

058-0230-014
RESIDENT
10680 COLOMA RD # 165
RANCHO CORDOVA CA 95670

058-0230-014
RESIDENT
10680 COLOMA RD # 166
RANCHO CORDOVA CA 95670

058-0230-014
RESIDENT
10680 COLOMA RD # 167
RANCHO CORDOVA CA 95670

058-0230-014
RESIDENT
10680 COLOMA RD # 168
RANCHO CORDOVA CA 95670

058-0230-014
RESIDENT
10680 COLOMA RD # 169
RANCHO CORDOVA CA 95670

058-0230-014
RESIDENT
10680 COLOMA RD # 170
RANCHO CORDOVA CA 95670

058-0230-014
RESIDENT
10680 COLOMA RD # 171
RANCHO CORDOVA CA 95670

058-0230-014
RESIDENT
10680 COLOMA RD # 172
RANCHO CORDOVA CA 95670

058-0230-014
RESIDENT
10680 COLOMA RD # 173
RANCHO CORDOVA CA 95670

058-0230-014
RESIDENT
10680 COLOMA RD # 174
RANCHO CORDOVA CA 95670

058-0230-014
RESIDENT
10680 COLOMA RD # 175
RANCHO CORDOVA CA 95670

058-0230-014
RESIDENT
10680 COLOMA RD # 176
RANCHO CORDOVA CA 95670

058-0230-014
RESIDENT
10680 COLOMA RD # 177
RANCHO CORDOVA CA 95670

058-0230-014
RESIDENT
10680 COLOMA RD # 178
RANCHO CORDOVA CA 95670

058-0230-014
RESIDENT
10680 COLOMA RD # 179
RANCHO CORDOVA CA 95670

058-0230-014
RESIDENT
10680 COLOMA RD # 180
RANCHO CORDOVA CA 95670

058-0230-015
RESIDENT
10700 COLOMA RD # 1
RANCHO CORDOVA CA 95670

058-0230-015
RESIDENT
10700 COLOMA RD # 2
RANCHO CORDOVA CA 95670

058-0230-015
RESIDENT
10700 COLOMA RD # 3
RANCHO CORDOVA CA 95670

058-0230-015
RESIDENT
10700 COLOMA RD # 4
RANCHO CORDOVA CA 95670

058-0230-015
RESIDENT
10700 COLOMA RD # 5
RANCHO CORDOVA CA 95670

058-0230-015
RESIDENT
10700 COLOMA RD # 6
RANCHO CORDOVA CA 95670

058-0230-015
RESIDENT
10700 COLOMA RD # 7
RANCHO CORDOVA CA 95670

058-0230-015
RESIDENT
10700 COLOMA RD # 8
RANCHO CORDOVA CA 95670

058-0230-015
RESIDENT
10700 COLOMA RD # 9
RANCHO CORDOVA CA 95670

058-0230-015
RESIDENT
10700 COLOMA RD # 10
RANCHO CORDOVA CA 95670

058-0230-015
RESIDENT
10700 COLOMA RD # 11
RANCHO CORDOVA CA 95670

058-0230-015
RESIDENT
10700 COLOMA RD # 12
RANCHO CORDOVA CA 95670

058-0230-015
RESIDENT
10700 COLOMA RD # 13
RANCHO CORDOVA CA 95670

058-0230-015
RESIDENT
10700 COLOMA RD # 14
RANCHO CORDOVA CA 95670

058-0230-015
RESIDENT
10700 COLOMA RD # 15
RANCHO CORDOVA CA 95670

058-0230-015
RESIDENT
10700 COLOMA RD # 16
RANCHO CORDOVA CA 95670

058-0230-015
RESIDENT
10700 COLOMA RD # 17
RANCHO CORDOVA CA 95670

058-0230-015
RESIDENT
10700 COLOMA RD # 18
RANCHO CORDOVA CA 95670

058-0230-015
RESIDENT
10700 COLOMA RD # 19
RANCHO CORDOVA CA 95670

058-0230-015
RESIDENT
10700 COLOMA RD # 20
RANCHO CORDOVA CA 95670

058-0230-015
RESIDENT
10700 COLOMA RD # 21
RANCHO CORDOVA CA 95670

058-0230-015
RESIDENT
10700 COLOMA RD # 22
RANCHO CORDOVA CA 95670

058-0230-015
RESIDENT
10700 COLOMA RD # 23
RANCHO CORDOVA CA 95670

058-0230-015
RESIDENT
10700 COLOMA RD # 24
RANCHO CORDOVA CA 95670

058-0230-015
RESIDENT
10700 COLOMA RD # 25
RANCHO CORDOVA CA 95670

058-0230-015
RESIDENT
10700 COLOMA RD # 26
RANCHO CORDOVA CA 95670

058-0230-015
RESIDENT
10700 COLOMA RD # 27
RANCHO CORDOVA CA 95670

058-0230-015
RESIDENT
10700 COLOMA RD # 28
RANCHO CORDOVA CA 95670

058-0230-015
RESIDENT
10700 COLOMA RD # 29
RANCHO CORDOVA CA 95670

058-0230-015
RESIDENT
10700 COLOMA RD # 30
RANCHO CORDOVA CA 95670

058-0230-015
RESIDENT
10700 COLOMA RD # 31
RANCHO CORDOVA CA 95670

058-0230-015
RESIDENT
10700 COLOMA RD # 32
RANCHO CORDOVA CA 95670

058-0230-015
RESIDENT
10700 COLOMA RD # 33
RANCHO CORDOVA CA 95670

058-0230-015
RESIDENT
10700 COLOMA RD # 34
RANCHO CORDOVA CA 95670

058-0230-015
RESIDENT
10700 COLOMA RD # 35
RANCHO CORDOVA CA 95670

058-0230-015
RESIDENT
10700 COLOMA RD # 36
RANCHO CORDOVA CA 95670

058-0230-015
RESIDENT
10700 COLOMA RD # 37
RANCHO CORDOVA CA 95670

058-0230-015
RESIDENT
10700 COLOMA RD # 38
RANCHO CORDOVA CA 95670

058-0230-015
RESIDENT
10700 COLOMA RD # 39
RANCHO CORDOVA CA 95670

058-0230-015
RESIDENT
10700 COLOMA RD # 40
RANCHO CORDOVA CA 95670

058-0230-015
RESIDENT
10700 COLOMA RD # 41
RANCHO CORDOVA CA 95670

058-0230-015
RESIDENT
10700 COLOMA RD # 42
RANCHO CORDOVA CA 95670

058-0230-015
RESIDENT
10700 COLOMA RD # 43
RANCHO CORDOVA CA 95670

058-0230-015
RESIDENT
10700 COLOMA RD # 44
RANCHO CORDOVA CA 95670

058-0230-015
RESIDENT
10700 COLOMA RD # 45
RANCHO CORDOVA CA 95670

058-0230-015
RESIDENT
10700 COLOMA RD # 46
RANCHO CORDOVA CA 95670

058-0230-015
RESIDENT
10700 COLOMA RD # 47
RANCHO CORDOVA CA 95670

058-0230-015
RESIDENT
10700 COLOMA RD # 48
RANCHO CORDOVA CA 95670

058-0230-015
RESIDENT
10700 COLOMA RD # 49
RANCHO CORDOVA CA 95670

058-0230-015
RESIDENT
10700 COLOMA RD # 50
RANCHO CORDOVA CA 95670

058-0230-015
RESIDENT
10700 COLOMA RD # 51
RANCHO CORDOVA CA 95670

058-0230-015
RESIDENT
10700 COLOMA RD # 52
RANCHO CORDOVA CA 95670

058-0230-015
RESIDENT
10700 COLOMA RD # 53
RANCHO CORDOVA CA 95670

058-0230-015
RESIDENT
10700 COLOMA RD # 54
RANCHO CORDOVA CA 95670

058-0230-015
RESIDENT
10700 COLOMA RD # 55
RANCHO CORDOVA CA 95670

058-0230-015
RESIDENT
10700 COLOMA RD # 56
RANCHO CORDOVA CA 95670

058-0230-015
RESIDENT
10700 COLOMA RD # 57
RANCHO CORDOVA CA 95670

058-0230-015
RESIDENT
10700 COLOMA RD # 58
RANCHO CORDOVA CA 95670

058-0230-015
RESIDENT
10700 COLOMA RD # 59
RANCHO CORDOVA CA 95670

058-0230-015
RESIDENT
10700 COLOMA RD # 60
RANCHO CORDOVA CA 95670

058-0230-015
RESIDENT
10700 COLOMA RD # 61
RANCHO CORDOVA CA 95670

058-0230-015
RESIDENT
10700 COLOMA RD # 62
RANCHO CORDOVA CA 95670

058-0230-015
RESIDENT
10700 COLOMA RD # 63
RANCHO CORDOVA CA 95670

058-0230-015
RESIDENT
10700 COLOMA RD # 64
RANCHO CORDOVA CA 95670

058-0230-015
RESIDENT
10700 COLOMA RD # 65
RANCHO CORDOVA CA 95670

058-0230-015
RESIDENT
10700 COLOMA RD # 66
RANCHO CORDOVA CA 95670

058-0230-015
RESIDENT
10700 COLOMA RD # 67
RANCHO CORDOVA CA 95670

058-0230-015
RESIDENT
10700 COLOMA RD # 68
RANCHO CORDOVA CA 95670

058-0230-015
RESIDENT
10700 COLOMA RD # 69
RANCHO CORDOVA CA 95670

058-0230-015
RESIDENT
10700 COLOMA RD # 70
RANCHO CORDOVA CA 95670

058-0230-015
RESIDENT
10700 COLOMA RD # 71
RANCHO CORDOVA CA 95670

058-0230-015
RESIDENT
10700 COLOMA RD # 72
RANCHO CORDOVA CA 95670

058-0230-015
RESIDENT
10700 COLOMA RD # 73
RANCHO CORDOVA CA 95670

058-0230-015
RESIDENT
10700 COLOMA RD # 74
RANCHO CORDOVA CA 95670

058-0230-015
RESIDENT
10700 COLOMA RD # 75
RANCHO CORDOVA CA 95670

058-0230-015
RESIDENT
10700 COLOMA RD # 76
RANCHO CORDOVA CA 95670

058-0230-015
RESIDENT
10700 COLOMA RD # 77
RANCHO CORDOVA CA 95670

058-0230-015
RESIDENT
10700 COLOMA RD # 78
RANCHO CORDOVA CA 95670

058-0230-015
RESIDENT
10700 COLOMA RD # 79
RANCHO CORDOVA CA 95670

058-0230-015
RESIDENT
10700 COLOMA RD # 80
RANCHO CORDOVA CA 95670

058-0230-015
OCCUPANT
10700 COLOMA RD # OFFICE
RANCHO CORDOVA CA 95670

058-0230-016
TARSEM KAUR
2225 MCGREGOR DR
RANCHO CORDOVA CA 95670

058-0230-016
OCCUPANT
2229 MCGREGOR DR
RANCHO CORDOVA CA 95670

ATTACHMENT 5

SACRAMENTO SANITATION DISTRICT
10060 GOETHE ROAD
SACRAMENTO CA 95827

SACRAMENTO REGIONAL COUNTY SANITATION DISTRICT
10060 GOETHE ROAD
SACRAMENTO CA 95827

SACRAMENTO COUNTY WATER AGENCY
10151 FLORIN ROAD
SACRAMENTO CA 95829

PG&E
2730 GATEWAY OAKS DRIVE
SACRAMENTO CA 95833

PG&E
343 SACRAMENTO STREET
AUBURN CA 95603

SMUD
6301 S STREET MS B304
SACRAMENTO CA 95817

SMUD
6301 S STREET MS B304
SACRAMENTO CA 95817

SMUD
6301 S STREET MS B404
SACRAMENTO CA 95817

SACRAMENTO METROPOLITAN FIRE
10545 ARMSTRONG AVE STE 310
MATHER CA 95655

FOLSOM CORDOVA UNIFIED SCHOOL DISTRICT
1965 BIRKMONT DR
RANCHO CORDOVA CA 95742

GOLDEN STATE WATER COMPANY
3005 GOLD CANAL DR
RANCHO CORDOVA CA95670

CITY OF RANCHO CORDOVA
2729 PROSPECT PARK DR
RANCHO CORDOVA CA 95670

MEMORANDUM

DATE: October 7, 2019

TO: Honorable Mayor and Council Members

FROM: Micah Runner, Deputy City Manager and Laura Fickle, Economic Development Analyst

SUBJECT: **UPDATE ON THE MILLS STATION DISTRICT (FORMERLY KNOWN AS THE CIVIC CENTER) DEVELOPMENT PROJECT**

RECOMMENDATION

Receive general information about the proposals, selection process and expected timeline for determining the recommended Mills Station District Project Development Partner.

RESULT OF RECOMMENDED ACTION

The project review team will move forward with the selection process and will return to City Council with the recommended Mills Station District Project Development Partner.

BACKGROUND

In response to Council identifying a Civic Center/Community Center as a common goal and priority for the community, a series of four work sessions were held to refine the vision, select a site location, and look at contrasting site layouts for a test fit of programmed facilities. The Mills Station property was selected as the site location for the Civic Center/Community Center. The potential uses of the facility were identified by Council as the following: as a space for performing/visual arts, a recreational gymnasium, space to accommodate meetings and an outdoor area to accommodate gatherings.

After the City Council endorsed the idea of soliciting proposals from qualified developers to partner with on the project through a competitive process, an Offering Memorandum (OM) was prepared to solicit interest.

The OM was released in July 2019 and a conference call was held in August for interested parties. September 20, 2019 was the final deadline for development teams to submit Letters of Interest.

Staff received eight Letters of Interest from Development Partners with teams made up of local, statewide, and national organizations. The variety of proposed elements included in the Letters of Interest ranged from the following:

- 120-800 units of affordable, market rate, workforce and senior housing options
- 20,000 – 60,000 sf of Community Center Space

- 5,000 – 60,000 sf of proposed commercial/retail

Types of amenities presented:

- Food truck court
- Art exhibit space
- Artists' studios
- Bowling alley
- Movie theaters
- Day care center
- Fitness center
- Performing arts center
- Co-working space
- Market/Food Hall
- Outdoor amphitheater
- Splash pad
- Commercial kitchen
- Dog park

Staff will convene an Evaluation Committee with representatives from the Sacramento Area Council of Governments (SACOG), Los Rios Community College at Rancho Cordova, Sacramento Regional Transit District, Cordova Community Council, Cordova Recreation and Parks District and city staff. The committee will review all received Letters of Interest and accompanying material in order to narrow the pool of potential development partners to three by the end of October. The final three potential development partners will be asked to present to City Council at an upcoming City Council Meeting. The development team will also be asked to submit any requested supplemental material in December. The committee will take all additional material from the Council presentations and supplemental material information to assist in the recommendation of the preferred development partner.

It is anticipated that the Evaluation Committee will recommend the developer to enter into an Exclusive Right to Negotiation (ERN) agreement with the City in January/February 2020. Entering into an ERN will allow staff and the selected development team to negotiate and recommend an agreement to develop the Mills Station District Project.

FISCAL IMPACT

There is no fiscal impact at this time. Once a Development Partner is recommended by the Evaluation Committee, staff will return to City Council for a vote on an agreement.